TSP-5160

Aardvark

Robinia wood toddler airplane

Robinia Wood:

Crawling

Climbing

Sliding



Ages 2-5

Users 12

Dimensions L: 110" W: 94" H: 69" | cm L: 256 W: 299 H: 145

Safety Zone 20'-5.6"/25'-2.7" | 769/624 cm

Fall Height 1'-11" | 60 cm

Accessible

The Aardvark toddler airplane is made from natural European Robinia Wood and features a stainless-steel 316 construction, giving it high durability alongside an attractive appearance. The system includes design elements such as a rounded roof, plastic chain slide, and a decorative propeller that mimics the flying experience. The play surfaces, shaped like wings, allow children to imagine they are pilots, jumping and playing while developing creativity and imagination. The system is carefully designed to provide a diverse and safe play experience for toddlers, combining physical activity with imaginative play.



Robinia Wood

European Robinia wood is natural, robust, and durable, particularly suitable for use in outdoor playground equipment. It complies with stringent standards such as FSC, has a smooth and pleasant touch, a natural and authentic appearance, and integrates well with natural surroundings. Its high durability, long lifespan, and being a natural and safe material make it a popular choice for use in playground equipment.

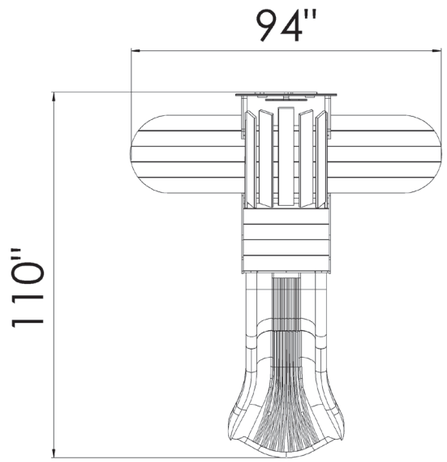

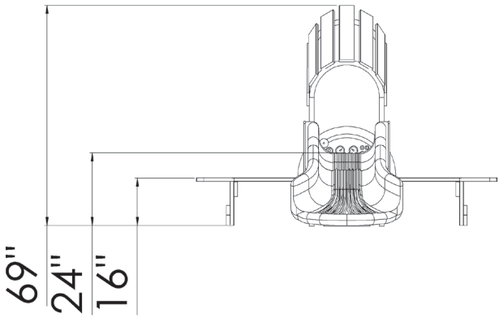



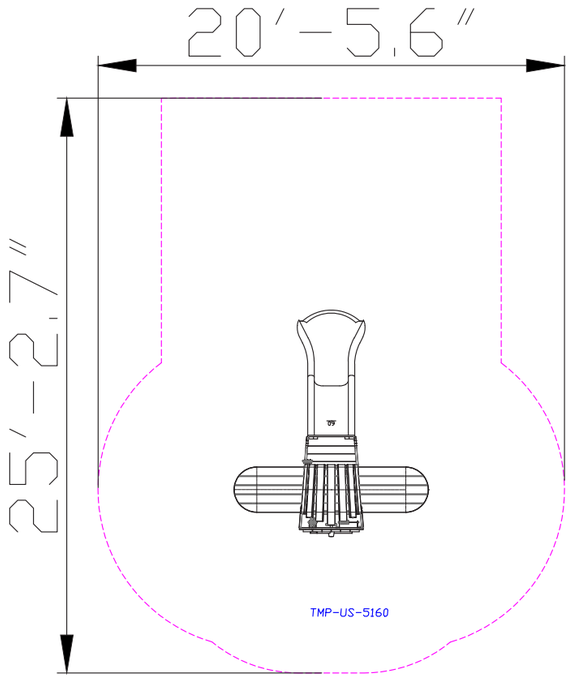



Toddler Slide

The toddler slide provides a safe and enjoyable sliding experience for little ones. It develops coordination, movement, balance, and self-.confidence for young players



Moving Game

The moving game provides dynamic activity that develops players' coordination, strength, and motor .skills

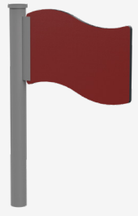

Decora-tions and Accesso-

Decorations and accessories adorn the structures and highlight the theme of the playground. They encourage players to use their imagination and .creativity during play

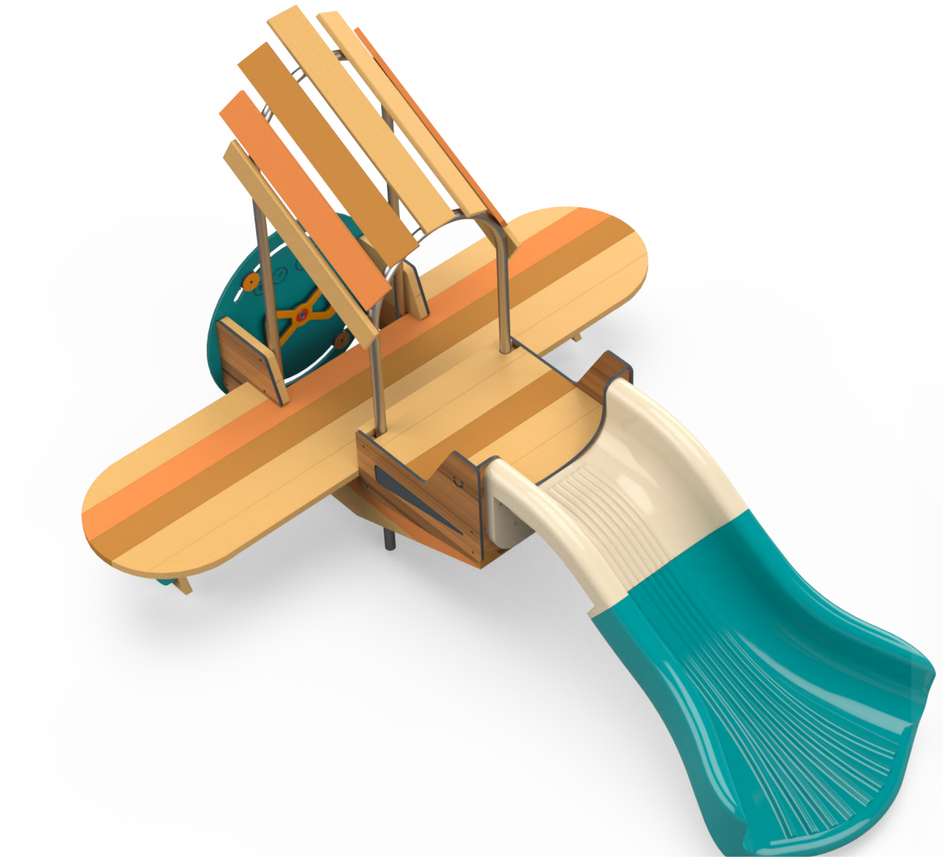



Motor Development

Hand-eye coordination - Developing coordination and precision in activities .requiring fine motor skills

Cognitive Development

Spatial awareness- Improving the ability to understand and navigate space through mazes and courses.. Curiosity - Encouraging exploration and discovery through equipment providing new and unfamiliar experiences. Creativity- Developing creative thinking and imagination in

Emotional Development

Imagination- Encouraging imagination and creating play worlds. Confidence- Building self-confidence and belief in one's personal abilities. Independence- Developing independence and the ability to make .personal decisions

Social Development

Respect for boundaries- Learning the importance of respecting personal and social boundaries. Friendship creation- Creating friendships and .strengthening social bonds

Physical Development

Climbing - Strengthening arm and leg muscles, developing fitness and endurance. Crawling - Strengthening abdominal and back muscles, improving coordination and flexibility. Sliding - Strengthening leg and arm .muscles and improving coordination