TSP-5182

Risotto

Robinia wood play system model Risotto

Robinia Wood:

Rope Cables:

Balancing

Rotation

Climbing

Jumping

Crawling

Hanging

Sliding



Ages 5-12

Users 63

Dimensions L: 35' W: 26'- H:19'-5.5" | L: 1094 W: 812 H: 608 cm

Safety Zone 59'/ 43'-7.8" | 1798/ 1330 cm

Fall Height 9'-3.4" | 290 cm

Accessible

The Risotto play system is made from natural European Robinia Wood and blends harmoniously into outdoor spaces such as playgrounds and parks. The system offers a variety of activities, including twisting slides at different heights, rope ladders, and climbing elements that allow children to explore, climb, slide, and play together. The natural design and subtle colors create an inviting environment that encourages physical activity, creativity, and social interaction.

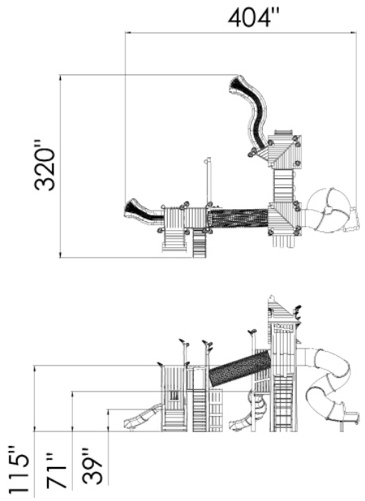

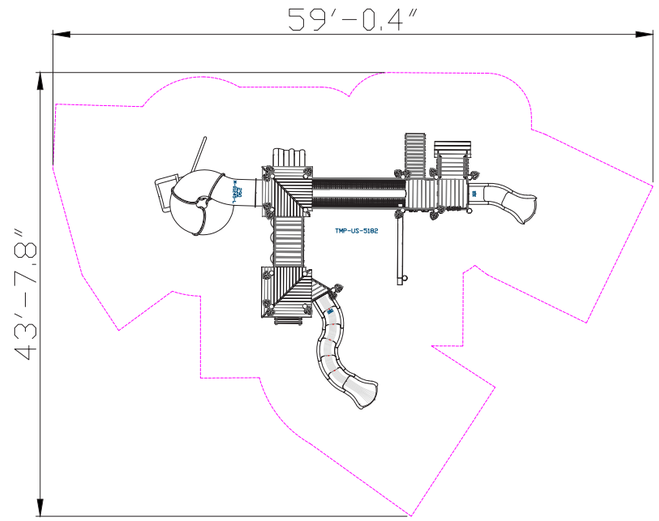





Recycled HDPE

HDPE (High-Density Polyethylene) is a recycled material made from high-density polyethylene, produced from recycled materials that allows for further recycling. It excels in resistance to UV rays and wear and tear, making it particularly suitable for use in outdoor playground equipment. Its touch is smooth and pleasant, and its appearance is maintained over time. The advantages include high resistance to harsh weather conditions and environmental preservation. The material is capable of absorbing high energy, which helps prevent fractures.



Rope Cables

Rope Cables are made of synthetic polypropylene (PP) fibers combined with a galvanized steel core for improved strength and durability. They meet strict standards such as MATI 1498/1497, ASTM A240, and EN 10088, ensuring durability and safety for use in playground equipment. The cables offer a soft and pleasant touch that does not harm the hands during use and are available in various diameters and colors, allowing for creative and aesthetic design.



Robinia Wood

European Robinia wood is natural, robust, and durable, particularly suitable for use in outdoor playground equipment. It complies with stringent standards such as FSC, has a smooth and pleasant touch, a natural and authentic appearance, and integrates well with natural surroundings. Its high durability, long lifespan, and being a natural and safe material make it a popular choice for use in playground equipment.

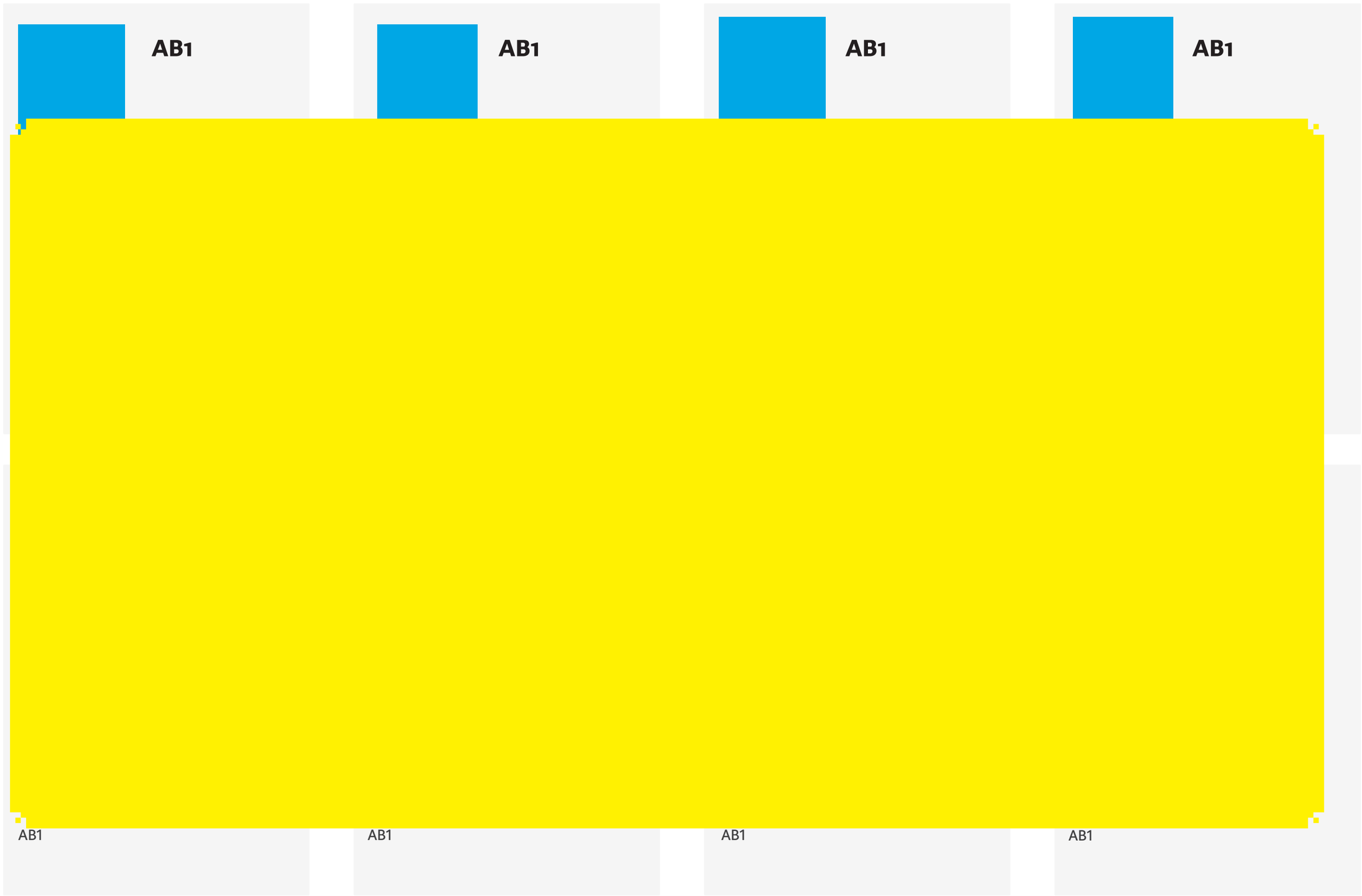
AB1
AB1
AB1
AB1
AB1
AB1
AB1
AB1





Motor Development

Foot-eye coordination - Improving coordination and balance through various equipment. Hand-eye coordination - Developing coordination and precision in activities requiring fine motor skills.

Physical Development

Climbing - Strengthening arm and leg muscles, developing fitness and endurance Sliding - Strengthening leg and arm muscles and improving coordination.

Emotional Development

Perseverance- Encouraging perseverance and repeated attempts. Achievement- Developing a sense of accomplishment and satisfaction from success in challenging equipment.