TSP-10747B

Balloons TLV 3B

Play system model Balloons TLV 3B

Recycled HDPE:

Steel:

Rope Cables:

Balancing

Sliding

Climbing



Ages 5-12

Users 289

Dimensions L: 64'-7.3" W: 72' 10.8" H: 30'-1" | L: 2019 W: 2278 H: 940 cm

Safety Zone: 86'-7.6" / 79'-6.8"

Fall Height 9' 3.4" | 290 cm

Accessible+

The combined 3 Balloons TLV equipment is an iconic creation that won the international Good Design Award in 2022, thanks to its groundbreaking design and advanced accessibility. Inspired by hot air balloons, the system offers a spectacular and interactive play experience for children of all ages and abilities. The equipment includes colorful canopies that add a unique visual element, and slides at varying heights that provide exciting sliding experiences. Additionally, a system of challenging bridges and diverse climbing nets invites children to engage in physical challenges while enjoying playful activities. Accessibility is a key feature in the equipment's design, with accessible bridges extending to the upper level, ensuring that every visitor, regardless of limitations, can fully enjoy the system.



Recycled HDPE

HDPE (High-Density Polyethylene) is a recycled material made from high-density polyethylene, produced from recycled materials that allows for further recycling. It excels in resistance to UV rays and wear and tear, making it particularly suitable for use in outdoor playground equipment. Its touch is smooth and pleasant, and its appearance is maintained over time. The advantages include high resistance to harsh weather conditions and environmental preservation. The material is capable of absorbing high energy, which helps prevent fractures.



Steel

Steel structure that is strong and durable, oven-painted galvanized and coated with lead-free polyester powder for corrosion and rust resistance. The steel meets strict EN 1176 standards, ensuring high quality and safety. The steel is anti-vandalistic, requires minimal maintenance, and is fully recyclable. The high-quality paint ensures weather resistance and maintains a new appearance over time.



Rope Cables

Rope Cables are made of synthetic polypropylene (PP) fibers combined with a galvanized steel core for improved strength and durability. They meet strict standards, such as ASTM A240 and EN 10088, ensuring durability and safety for use in playground equipment. . The cables offer a soft and pleasant touch that does not harm the hands during use and are available in various diameters and colors, allowing for creative and aesthetic design.



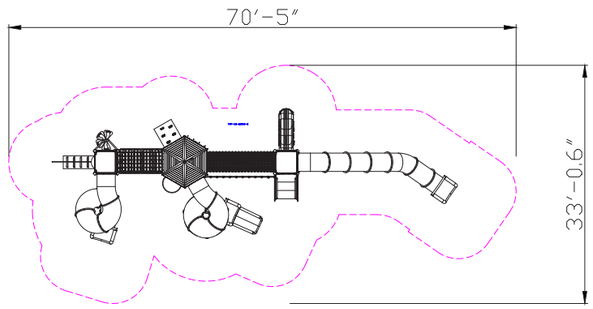

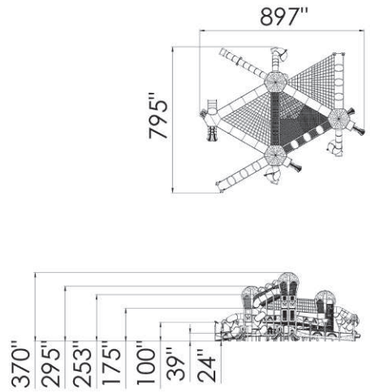

GOOD DESIGN Award

Winner of the GOOD DESIGN International Design Award for 2022, granted for outstanding and innovative design focusing on the highest level of quality, functionality, and aesthetics. The award is given to products that surpass the ordinary, embodying a design process that reflects excellence, durability, and strong public identity.

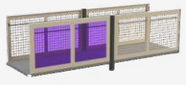

Wheelchair Bridge

The wheelchair bridge provides easy and safe access for wheelchairs, allowing for convenient passage between play towers and back. The bridge allows players with disabilities to move easily and integrate smoothly into the games. Its design ensures stability and security, enabling everyone to enjoy the play experience equally and accessibly.

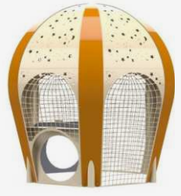

Hot Air Balloon Roof

This special roof encourages players to dream big and soar high in their imagination, just like a hot air balloon. The hot air balloon inspires and invokes a sense of adventure as players experience the play structure as a magical and fascinating place, enriching their play experience and encouraging them to aim high.



Transparent Slide Sections

Transparent slide sections add an interesting visual element to slides. The transparency of the sections allows for maintaining eye contact between the companion and the player during the slide, enhancing the sense of security and comfort for both parties. The transparent sections provide a unique and enjoyable sliding experience while maintaining a sense of connection and safety.



Bird's Nest Seat

The bird's nest seat is designed as a spacious and accommodating rope basket, allowing players to sit comfortably. It provides a sense of safety and stability during play, encouraging social interactions as players sit together and enjoy the structure.



Play Panel

The play panel provides a variety of interactive play options that develop players' motor and cognitive skills. Each panel offers a unique activity that stimulates thinking and encourages players to learn and discover more.



Moving Platform

The moving platform provides a dynamic movement experience that develops players' motor skills and coordination. Playing on the moving platform encourages stability and self-confidence while moving.



Closed Bridge

The closed bridge provides safe and convenient passage between parts of the structure, developing players' motor skills and balance. The bridge offers a sense of security in a protected environment while maintaining the element of adventure and challenge. The height effect adds a dimension of excitement as players face height in a safe and protected environment. Playing on the bridge encourages daring and self-confidence.



Slide

A slide is a fundamental and important element in any playground, considered one of the leading and most beloved attractions for players of all ages. The slide provides an enjoyable and exciting sliding experience that develops players' motor skills and coordination. Playing on the slide encourages movement, daring, and self-confidence.





Cognitive Development

Spatial awareness- Improving the ability to understand and navigate space through mazes and courses. Curiosity - Encouraging exploration and discovery through equipment providing new and unfamiliar experiences. Creativity- Developing creative thinking and imagination in open and interactive play. Exposure to diverse material - Learning about different materials and textures.

Emotional Development

Imagination- Encouraging imagination and creating play worlds. Courage- Facing fears and new challenges. Confidence- Building self-confidence and belief in one's personal abilities. Independence- Developing independence and the ability to make personal decisions. Patience- Practicing patience and waiting for one's turn. Resilience- Coping with failure and trying again.

Social Development

Communication- Developing effective and clear communication skills with playmates. Empathy- Developing empathy and the ability to understand and empathize with others' feelings. Respect for boundaries- Learning the importance of respecting personal and social boundaries. Friendship creation- Creating friendships and strengthening social bonds.

Physical Development

Climbing - Strengthening arm and leg muscles, developing fitness and endurance. Balancing- Improving balance and posture. Sliding - Strengthening leg and arm muscles and improving coordination.