TSP-D7101

Zigzag- Dog Play

Zigzag Balance Beam- Dog play Equipment

Robinia Wood:



Dimensions L: 12'-4.6" W: 6'-9.8" H: 1'-9.1" | L: 387 W: 213 H: 55 cm

Safety Zone 19'-4.7"/13'-8" | 591 / 417

The Zigzag walking beam is designed for both training and play. Part of the Psagot Playgrounds dog equipment series, it features a zigzag-shaped wooden beam for dogs to walk, enhancing their agility and balance. Made from powder-coated steel and premium pinewood, it offers the same high-quality finish as children's playground equipment, with non-toxic paint and carefully sanded wood to avoid splinters.

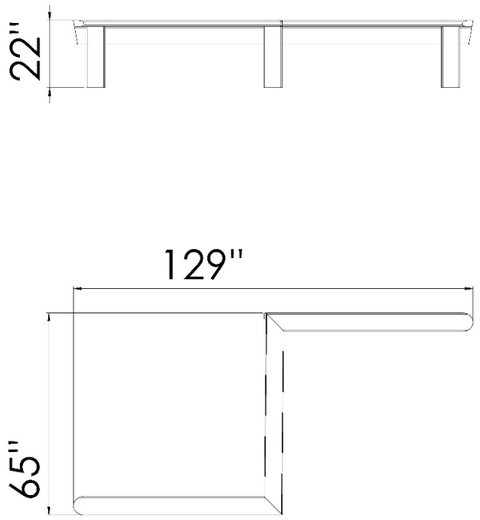

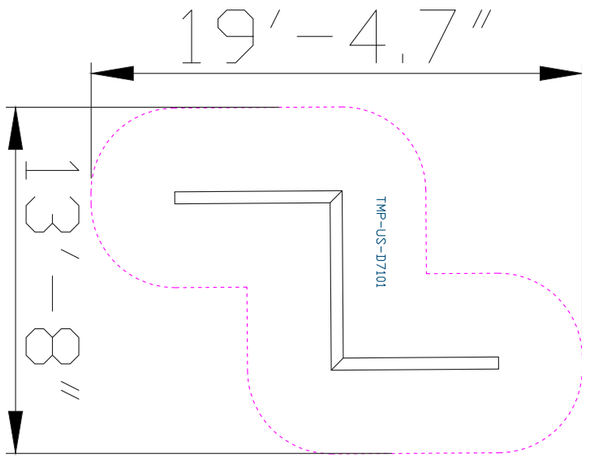





Robinia Wood

European Robinia wood is natural, robust, and durable, particularly suitable for use in outdoor playground equipment. It complies with stringent standards such as FSC, has a smooth and pleasant touch, a natural and authentic appearance, and integrates well with natural surroundings. Its high durability, long lifespan, and being a natural and safe material make it a popular choice for use in playground equipment.