TSP-D7105

Balance Beam - Dog Play

Balance Beam - Dog play

Robinia Wood:



Dimensions L: 19'-3.6" W: 5.8" H: 1'-9.1" | cm L: 603 W: 15 H: 55

Safety Zone 31'-9.8"/12'-5.1" | 970 / 379 cm

This low-slope balance beam is designed for both training and play. Part of the Psagot Playgrounds dog equipment series, it features a low, dual-slope ramp. Made from powder-coated steel and premium pinewood, it offers the same high-quality finish as children's playground equipment, with non-toxic paint and carefully sanded wood to avoid splinters. This challenging structure helps dogs develop balance and agility.

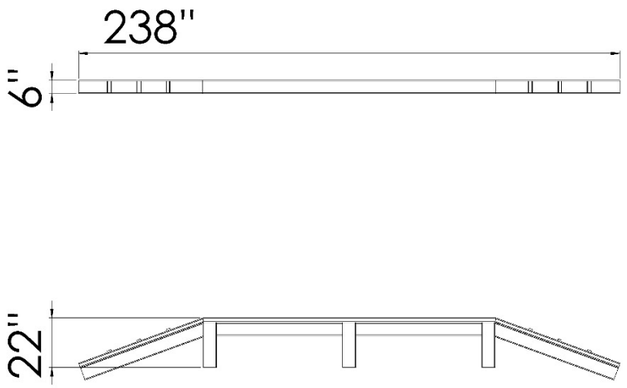

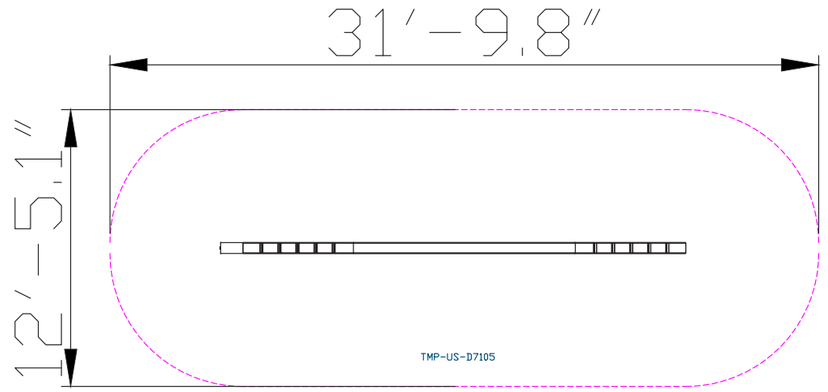





Robinia Wood

European Robinia wood is natural, robust, and durable, particularly suitable for use in outdoor playground equipment. It complies with stringent standards such as FSC, has a smooth and pleasant touch, a natural and authentic appearance, and integrates well with natural surroundings. Its high durability, long lifespan, and being a natural and safe material make it a popular choice for use in playground equipment.