TSP-N3904A

Ninja Bicycle Wheels

Ninja Bicycle Wheels - Ninja Course

Recycled HDPE:

Steel:

Balancing

Rotation

Hanging

Jumping

Swinging



Ages 5-12

Users 3

Dimensions L: 13'-3" W: 4'-2.3" H: 8'-3.8" | L: 414 W:131 H: 260 cm

Safety Zone 32'-1.6"/22'-2.3" | 978/ 676 cm

Fall Height 7'-8.2" | 240 cm

Accessible

A true ninja must keep their mind sharp and focused at all times. To pass the Ninja Bicycle Wheel obstacle a lot of concentration, planning, and thinking is needed. This, combined with arm strength and the use of core muscles to maintain balance, is essential for success.

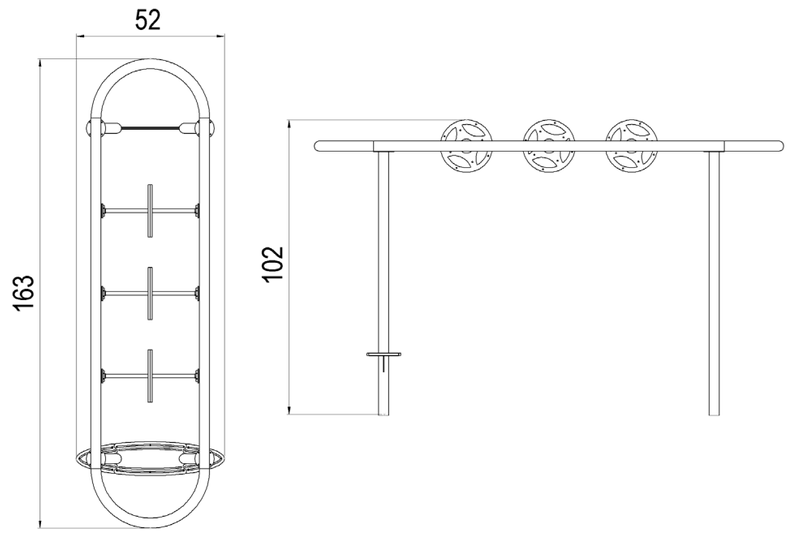

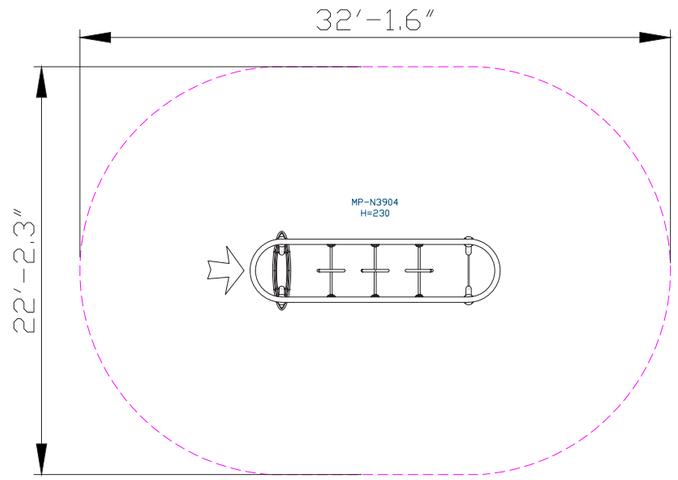





Steel

Steel structure that is strong and durable, oven-painted galvanized and coated with lead-free polyester powder for corrosion and rust resistance. The steel meets strict EN 1176 and MATI 1498/1497 standards, ensuring high quality and safety. The steel is anti-vandalistic, requires minimal maintenance, and is fully recyclable. The high-quality paint ensures weather resistance and maintains a new appearance over time.



Recycled HDPE

HDPE (High-Density Polyethylene) is a recycled material made from high-density polyethylene, produced from recycled materials that allows for further recycling. It excels in resistance to UV rays and wear and tear, making it particularly suitable for use in outdoor playground equipment. Its touch is smooth and pleasant, and its appearance is maintained over time. The advantages include high resistance to harsh weather conditions and environmental preservation. The material is capable of absorbing high energy, which helps prevent fractures.



Hand Walking Element

The hand-walking element strengthens upper body strength and develops coordination and balance in players. By moving using only their hands, players learn to control their movements, improve their motor skills, and strengthen their arms and shoulders. The height effect and the fact that their feet do not touch the ground add an extra dimension of challenge, requiring players to maintain balance and build self-confidence as they tackle a significant physical challenge.



Tread Surface

The tread surface provides support and safety during play on the structure. The surface is designed to prevent slipping and improve players' stability and security.



Motor Development

Core muscle strengthening- Strengthening abdominal and back muscles through challenging equipment. Hand-eye coordination - Developing coordination and precision in activities requiring fine motor skills.



Cognitive Development

Concentration- Developing the ability to focus and maintain attention in equipment requiring concentration. Spatial awareness- Improving the ability to understand and navigate space through mazes and courses..



Emotional Development

Courage- Facing fears and new challenges. Confidence- Building self-confidence and belief in one's personal abilities. Independence- Developing independence and the ability to make personal decisions. Resilience- Coping with failure and trying again. Perseverance- Encouraging perseverance and repeated attempts. Achievement- Developing a sense of accomplishment and satisfaction from success in challenging equipment.



Social Development

Cooperation- Encouraging joint work and reaching shared goals. Communication- Developing effective and clear communication skills with playmates.



Physical Development

Jumping- Improving leg strength and balance. Hanging - Strengthening arm, back, and shoulder muscles. Balancing- Improving balance and posture. Swinging - Strengthening core muscles and enhancing the sense of movement.