TSP-2439

Dragon Spring

Dragon Spring

Steel:

Recycled HDPE:

Balancing

Jumping

Swinging

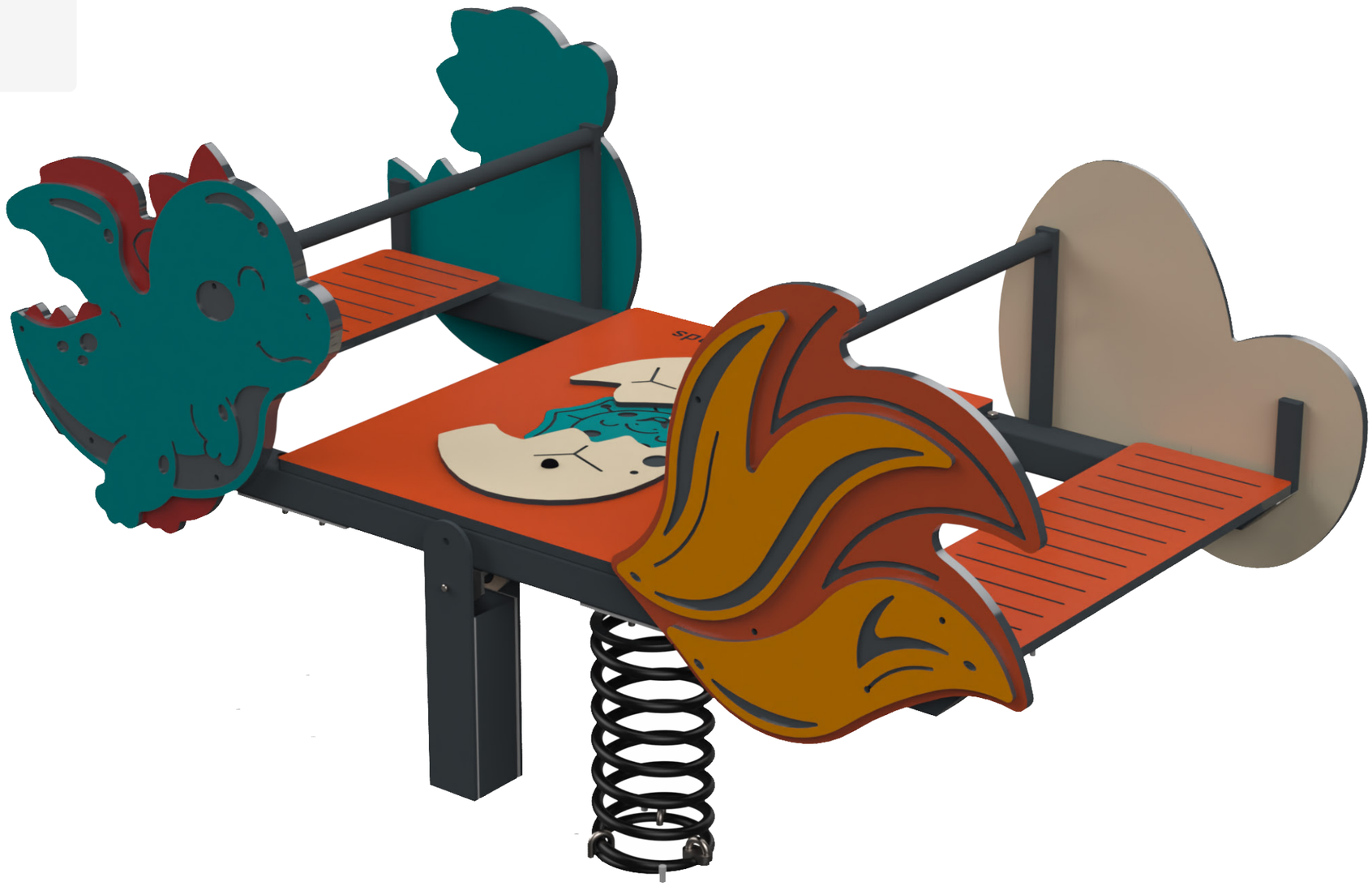

Ages 2-12

Users 8

Dimensions L: 6'-10.6" W: 3'-6.2" H: 3'-4.3" | L: 215 W: 110 H: 105 cm

Safety Zone: 20'-1.9" / 15'-8.8"

Fall Height 1'-9.7" | 55 cm

Accessible

The Dragon Spring is an exciting, multi-user spring designed to bring fun and fantasy together in a dynamic play experience that transforms ordinary playground moments into extraordinary adventures. Inspired by the thrilling "Dragon World" theme, this captivating piece features bold flames and dragon motifs that immediately capture children's imaginations and transport them into a realm of mythical creatures and magical possibilities. At the heart of the structure lies an interactive "dragon egg" that slides open and closed, revealing a charming baby dragon nestled inside. This delightful surprise element sparks curiosity and encourages social play as children work together to discover the hidden treasure within, creating natural opportunities for cooperative exploration and shared wonder.



Recycled HDPE

HDPE (High-Density Polyethylene) is a recycled material made from high-density polyethylene, produced from recycled materials that allows for further recycling. It excels in resistance to UV rays and wear and tear, making it particularly suitable for use in outdoor playground equipment. Its touch is smooth and pleasant, and its appearance is maintained over time. The advantages include high resistance to harsh weather conditions and environmental preservation. The material is capable of absorbing high energy, which helps prevent fractures.



Steel

Steel structure that is strong and durable, oven-painted galvanized and coated with lead-free polyester powder for corrosion and rust resistance. The steel meets strict EN 1176 standards, ensuring high quality and safety. The steel is anti-vandalistic, requires minimal maintenance, and is fully recyclable. The high-quality paint ensures weather resistance and maintains a new appearance over time.



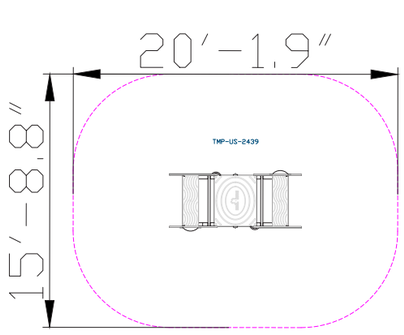

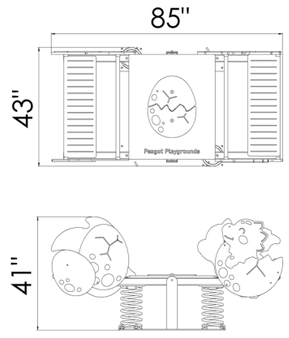



Seat

A seat that provides a small resting station during play where players can sit and rest. Suitable for short breaks or extended stays. Playing on the seat allows players to take a break from physical activity while maintaining connection with the environment and continuing social interactions.

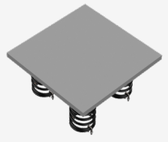

Springy Mat

The springy mat encourages players to jump and move. Playing on the springy mat develops players' strength, coordination, and balance.

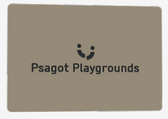

Engravings

Engravings add designs and illustrations to parts of the structure, enriching the play experience with an interesting visual element.



Hand and Foot Holds

Hand and foot holds provide support during play and use of the structure. Players develop their strength and coordination while maintaining stability and security.



Motor Development

Hand-eye coordination - Developing coordination and precision in activities requiring fine motor skills. Fine motor skills- Developing precise control in small movements through activities requiring fine manual skills.



Cognitive Development

Concentration- Developing the ability to focus and maintain attention in equipment requiring concentration. Regulation of force- Developing the ability to apply the right amount of force according to the activity.



Emotional Development

Imagination- Encouraging imagination and creating play worlds. Courage- Facing fears and new challenges. Confidence- Building self-confidence and belief in one's personal abilities. Independence- Developing independence and the ability to make personal decisions. Patience- Practicing patience and waiting for one's turn.



Social Development

Cooperation- Encouraging joint work and reaching shared goals. Communication- Developing effective and clear communication skills with playmates. Teamwork- Encouraging teamwork and developing group work skills. Empathy- Developing empathy and the ability to understand and empathize with others' feelings. Respect for boundaries- Learning the importance of respecting personal and social boundaries. Friendship creation- Creating friendships and strengthening social bonds.



Physical Development

Jumping- Improving leg strength and balance. Balancing- Improving balance and posture. Swinging - Strengthening core muscles and enhancing the sense of movement.

TSP-6927

Robinia Sign

Robina Playground Sign

Robinia Wood:



Dimensions L: 2'-1.3" W: 0'-2.7" H: 3'-5.5" | L: 66 W: 7 H: 108 cm

Safety Zone: 17'-9.8" / 13'-8.5"

Accessible

The Robinia Sign is an elegant, informative display designed to accompany fitness areas styled with natural Robinia wood elements. Thoughtfully crafted to harmonize with the surrounding equipment, it blends seamlessly into outdoor parks, forest, and community fitness spaces. The sign provides clear and concise information on the type of activities available and details the target audience and offers recommended exercise instructions for safe and effective use. The Robinia Sign enhances user experience by combining functional information with a natural aesthetic, promoting confidence, inclusive, and enjoyable outdoor workouts



Robinia Wood

European Robinia wood is natural, robust, and durable, particularly suitable for use in outdoor playground equipment. It complies with stringent standards such as FSC, has a smooth and pleasant touch, a natural and authentic appearance, and integrates well with natural surroundings. Its high durability, long lifespan, and being a natural and safe material make it a popular choice for use in playground equipment.

