TSP-2590C

Rubber Hills C

Topographic hill play system model Rubber Hills C

Steel:

Rope Cables:



Ages 2-5

Users 8

Dimensions L: 7’-6.6” W: 3’ 2.4” H: 3’-2.4” | L: 236 W: 100 H: 100 cm

Safety Zone: 19’-0.7” / 15’-9.3”

Fall Height 3’ 3.37” | 100 cm

Accessible

This innovative play system combines sculpted rubber mounds with dynamic movement tracks, inviting children to climb, jump, balance, and explore. Crafted from high-density safety rubber, the flexible surfaces offer both shock absorption and sensory stimulation, ensuring a safe yet engaging experience. The terrain features graded challenges through climbing paths, balance beams, and complex transitions, making it accessible and exciting for a wide age range. Hidden tunnels beneath the mounds add layers of discovery and imaginative play. Whether as a standalone play zone or an enhancement to an existing playground, this structure supports motor development, coordination, creativity, and social interaction within a visually inviting and tactile-rich landscape.

Steel

Steel structure that is strong and durable, oven-painted galvanized and coated with lead-free polyester powder for corrosion and rust resistance. The steel meets strict EN 1176 standards, ensuring high quality and safety. The steel is anti-vandalistic, requires minimal maintenance, and is fully recyclable. The high-quality paint ensures weather resistance and maintains a new appearance over time.



Rope Cables

Rope Cables are made of synthetic polypropylene (PP) fibers combined with a galvanized steel core for improved strength and durability. They meet strict standards, such as ASTM A240 and EN 10088, ensuring durability and safety for use in playground equipment. . The cables offer a soft and pleasant touch that does not harm the hands during use and are available in various diameters and colors, allowing for creative and aesthetic design.

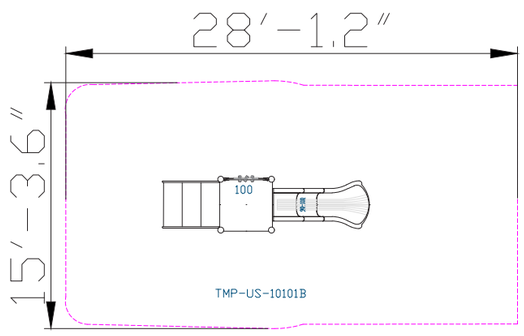

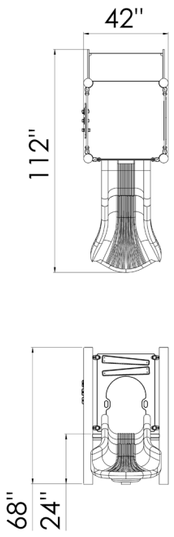

Hand and Foot Holds

Hand and foot holds provide support during play and use of the structure. Players develop their strength and coordination while maintaining stability and security.

Jungle Bridge

The jungle bridge is made of ropes in natural hues that mimic tree trunks and forest branches, giving a natural and adventurous look. The bridge is elevated, enhancing the sense of adventure and challenge as players progress along a relatively narrow strip. Playing on the jungle bridge encourages players to maintain balance and stability while moving, providing a fun and exciting experience reminiscent of walking through a wild forest.

Rubber Hills

Rubber hills provide a fun and challenging play experience that includes climbing, jumping, and sometimes even crawling. The hills allow children to develop strength, coordination, and balance while playing in a safe and enjoyable environment.

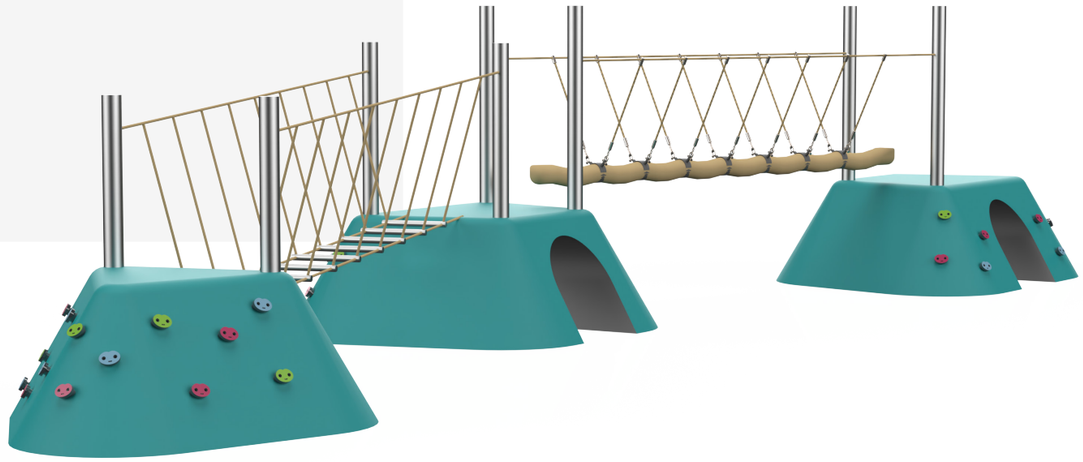

Cognitive Development

Concentration- Developing the ability to focus and maintain attention in equipment requiring concentration.

Spatial awareness- Improving the ability to understand and navigate space through mazes and courses.

Emotional Development

Courage- Facing fears and new challenges. Confidence- Building self-confidence and belief in one's personal abilities.Independence- Developing independence and the ability to make personal decisions. Resilience- Coping with failure and trying again.

Social Development

Respect for boundaries- Learning the importance of respecting personal and social boundaries. Friendship creation- Creating friendships and strengthening social bonds. Social skills- Developing social skills such as manners, reciprocity and mutual respect.

Physical Development

Climbing - Strengthening arm and leg muscles, developing fitness and endurance. Crawling - Strengthening abdominal and back muscles, improving coordination and flexibility. Sliding - Strengthening leg and arm muscles and improving coordination.

For illustration purposes only