TSP-2600

Fairytale Carriage

HPL structure model Fairytale Carriage

Polycarbonate:

Steel:

HPL:

Crawling

Sliding

Climbing

Jumping



Ages 2-12

Users 23

Dimensions L: 9′-4.1″ W: 23′-4.3″ H: 9′-3.7″ | L: 292 W: 730 H: 291 cm

Safety Zone: 35′-11″ / 24′-10.1″

Fall Height 1′-6.2″ | 60 cm

Accessible

The Fairytale Carriage is a whimsical and enchanting play structure that invites young children into a world of storytelling, imagination, and adventure. Inspired by the charm of an old-fashioned horse-drawn carriage, this beautifully detailed play element features large decorative wheels, grand entry doors, and open windows that encourage both curiosity and social interaction. At the front, a playful pony display connected by rods adds movement and magic to the scene, creating the illusion of a lively journey in progress.



Steel

Steel structure that is strong and durable, oven-painted galvanized and coated with lead-free polyester powder for corrosion and rust resistance. The steel meets strict EN 1176 standards, ensuring high quality and safety. The steel is anti-vandalistic, requires minimal maintenance, and is fully recyclable. The high-quality paint ensures weather resistance and maintains a new appearance over time.



HPL

HPL panels are high-pressure laminate boards produced by saturating multiple layers of kraft paper with phenolic resin. These panels offer high resistance to abrasion, scratches, and chemical impacts, maintaining their quality in both outdoor and indoor conditions. Available in a variety of colors and textures, HPL panels are used for surfaces, walls, and furniture in playground equipment, providing an aesthetic appearance and requiring low maintenance.



Polycarbonate

Colored polycarbonate is a durable, lightweight, and transparent thermoplastic polymer that complies with international standards such as EN 71 and ISO 179. It has a smooth touch, a glossy appearance, and is available in a variety of colors and transparencies. The material is used to create decorative elements in playground equipment, offering high impact resistance, UV protection, and great design flexibility



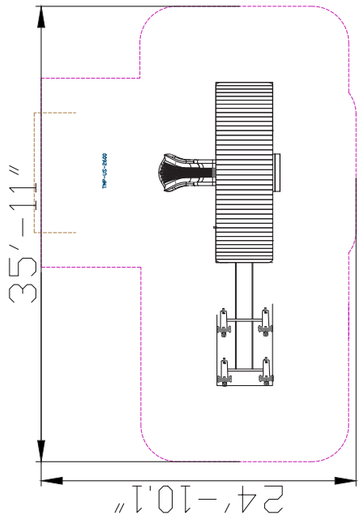

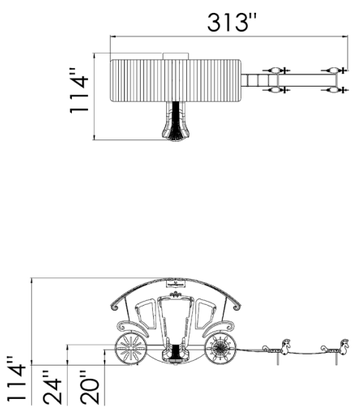



Toddler Slide

The toddler slide provides a safe and enjoyable sliding experience for little ones. It develops coordination, movement, balance, and self-confidence for young players.



Ladder

The ladder provides vertical access to the play structure and encourages players to develop physical skills such as strength, coordination, and balance. Climbing the ladder promotes courage and independence as players face heights and new challenges. The ladder strengthens hand and arm muscles and encourages proper body use.

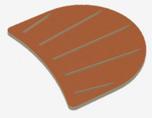

Seat

A seat that provides a small resting station during play where players can sit and rest. Suitable for short breaks or extended stays. Playing on the seat allows players to take a break from physical activity while maintaining connection with the environment and continuing social interactions.



Hand and Foot Holds

Hand and foot holds provide support during play and use of the structure. Players develop their strength and coordination while maintaining stability and security.

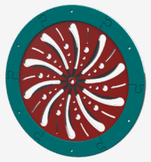

Play Panel

The play panel provides a variety of interactive play options that develop players' motor and cognitive skills. Each panel offers a unique activity that stimulates thinking and encourages players to learn and discover more.





Motor Development

Hand-eye coordination - Developing coordination and precision in activities requiring fine motor skills.

Sensory Development

Touch development- Diverse sensory experiences through different materials and textures. Vision development- Rich visual experiences through vibrant colors and shapes.

Cognitive Development

Curiosity - Encouraging exploration and discovery through equipment providing new and unfamiliar experiences. Creativity- Developing creative thinking and imagination in open and interactive play.

Emotional Development

Imagination- Encouraging imagination and creating play worlds.. Independence- Developing independence and the ability to make personal decisions.

Social Development

Cooperation- Encouraging joint work and reaching shared goals. Communication- Developing effective and clear communication skills with playmates. Respect for boundaries- Learning the importance of respecting personal and social boundaries. Friendship creation- Creating friendships and strengthening social bonds.

Physical Development

Climbing - Strengthening arm and leg muscles, developing fitness and endurance. Crawling - Strengthening abdominal and back muscles, improving coordination and flexibility. Jumping- Improving leg strength and balance. Sliding - Strengthening leg and arm muscles and improving coordination.