# TSP-5215

## M Robinia Swing

Robinia Swing model M Robinia Swing

Robinia Wood:

Crawling

Sliding

Climbing

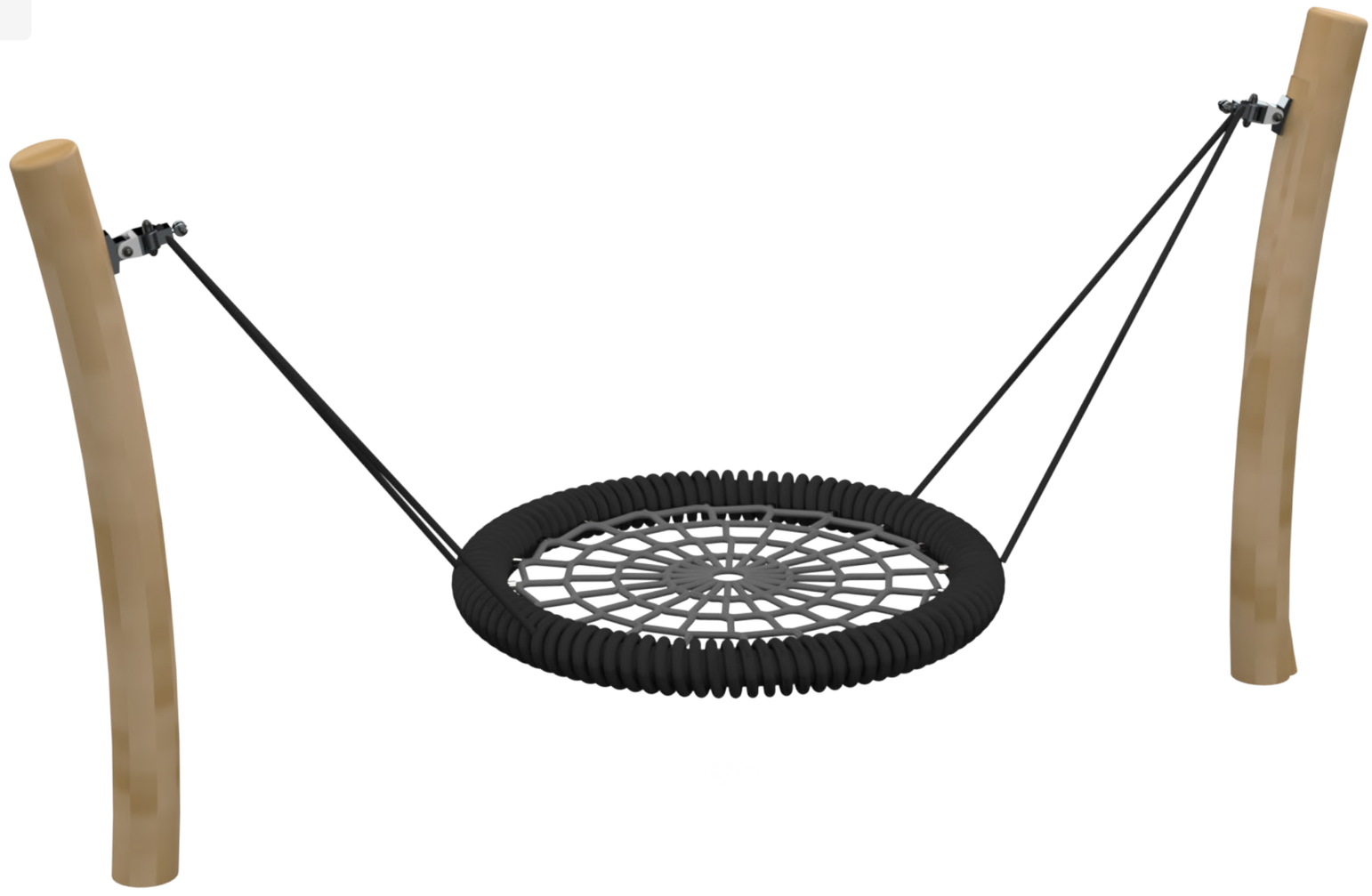

Ages 5-12

Users 5

Dimensions L: 77'-6.8" W: 83' 11.2" H: 27'-6.2" | L: 2424 W: 2623 H: 860 cm

Safety Zone:; 22'-7.7" / 18'-11.7"

Fall Height 4' 7.12" | 140 cm

Accessible

The M Robinia Swing is a beautifully crafted swing structure that pairs the organic elegance of curved Robinia wood beams with the comfort of a bird's nest seat, designed for gentle, circular motion and providing a unique floating sensation with stable, supportive movement. Crafted from maintenance-free natural Robinia wood—known for its high durability and resistance to weather without requiring chemical preservation — and premium steel-core ropes, the swing features a durable, spacious nest seat that harmonizes naturally with outdoor environments. Whether used solo, in pairs, or shared among small groups, the swing supports sensory regulation, balance, body coordination, social interaction, and imaginative play.



## Robinia Wood

European Robinia wood is natural, robust, and durable, particularly suitable for use in outdoor playground equipment. It complies with stringent standards such as FSC, has a smooth and pleasant touch, a natural and authentic appearance, and integrates well with natural surroundings. Its high durability, long lifespan, and being a natural and safe material make it a popular choice for use in playground equipment.

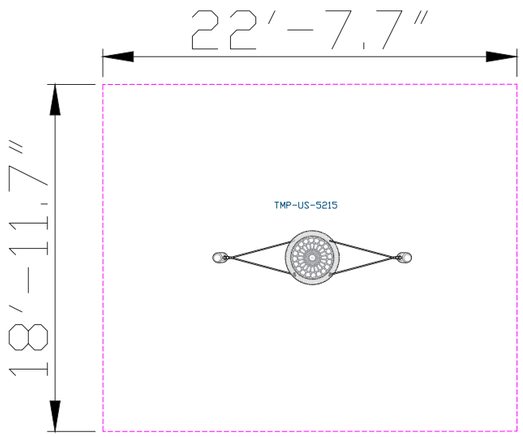


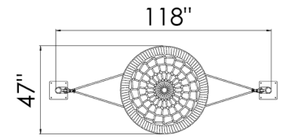







### Emotional Development

Courage- Facing fears and new challenges. Confidence- Building self-confidence and belief in one's personal abilities. Independence- Developing independence and the ability to make personal decisions. Resilience- Coping with failure and trying again.

### Social Development

Respect for boundaries- Learning the importance of respecting personal and social boundaries. Friendship creation- Creating friendships and strengthening social bonds.

### Physical Development

Climbing - Strengthening arm and leg muscles, developing fitness and endurance. Crawling - Strengthening abdominal and back muscles, improving coordination and flexibility. Sliding - Strengthening leg and arm muscles and improving coordination.