TSP-10758

Balloons NT 3

Inclusive play system model Balloons NT 3 towers

Steel:
Recycled HDPE:
Rope Cables:

Balancing
Climbing
Jumping
Sliding
Crawling



Ages 2-5
Users 88
Dimensions L: 4'-4.2" W: 3'-4.3" H: 24'-11.5" | L: 136 W: 105 H: 780 cm
Safety Zone: 65'-4.9" / 62'-5.7"
Fall Height 3'-3.37" | 100 cm
Accessible+

The Balloons NT 3 play system is a fully accessible evolution of the award-winning Good Design model. Balloons NT 3 draws inspiration from the beloved inclusive “Senses” series while reimagining the enchanting hot air balloon theme.

This thoughtfully designed play system features three vibrant towers shaped like floating balloons, seamlessly connected by climbing nets, suspension bridges, spiral and straight slides, and challenging movement trails. Wide ramps and dedicated inclusive zones ensure every child—regardless of ability—can explore, climb, slide, and play independently.



Recycled HDPE

HDPE (High-Density Polyethylene) is a recycled material made from high-density polyethylene, produced from recycled materials that allows for further recycling. It excels in resistance to UV rays and wear and tear, making it particularly suitable for use in outdoor playground equipment. Its touch is smooth and pleasant, and its appearance is maintained over time. The advantages include high resistance to harsh weather conditions and environmental preservation. The material is capable of absorbing high energy, which helps prevent fractures.



Steel

Steel structure that is strong and durable, oven-painted galvanized and coated with lead-free polyester powder for corrosion and rust resistance. The steel meets strict EN 1176 standards, ensuring high quality and safety. The steel is anti-vandalistic, requires minimal maintenance, and is fully recyclable. The high-quality paint ensures weather resistance and maintains a new appearance over time.



Rope Cables

Rope Cables are made of synthetic polypropylene (PP) fibers combined with a galvanized steel core for improved strength and durability. They meet strict standards, such as ASTM A240 and EN 10088, ensuring durability and safety for use in playground equipment. . The cables offer a soft and pleasant touch that does not harm the hands during use and are available in various diameters and colors, allowing for creative and aesthetic design.



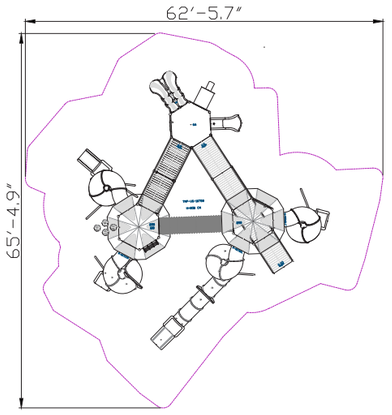

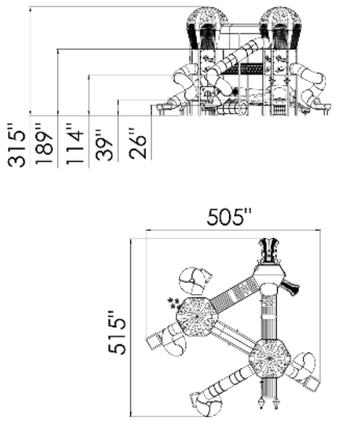



Designed Panel

The designed panel adds an aesthetic and unique dimension to the playground equipment, enhancing the overall play experience. The panel allows players to feel part of a creative and imaginative world, designed to align with the narrative of the playground. The design ensures easy and safe access to play activities, while maintaining a sense of security and enjoyment.



Transparent Slide Sections

Transparent slide sections add an interesting visual element to slides. The transparency of the sections allows for maintaining eye contact between the companion and the player during the slide, enhancing the sense of security and comfort for both parties. The transparent sections provide a unique and enjoyable sliding experience while maintaining a sense of connection and safety.



Double Slide

The double slide allows two players to slide simultaneously, encouraging friendly competition and the development of social skills. Shared sliding fosters cooperation and shared fun.



Accessibility Platform

The accessibility platform is a structure that is accessible for children with disabilities, allowing them to participate in play equally and safely. It is an ideal addition to any structure and playground that requires accessibility standards.



Kalani Stepping Stones

Kalani stepping stones provide safe and pleasant surfaces for climbing and playing. Players develop physical skills such as strength, coordination, and balance while walking on the stones. The stepping stones encourage players to explore their environment and build self-confidence and independence as they enjoy the sense of achievement with every step.



Hot Air Balloon Roof

This special roof encourages players to dream big and soar high in their imagination, just like a hot air balloon. The hot air balloon inspires and invokes a sense of adventure as players experience the play structure as a magical and fascinating place, enriching their play experience and encouraging them to aim high.

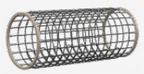

Crawl Bridge

The crawl bridge offers a physical challenge that develops players' motor skills, coordination, and balance. Positioned at a height, it adds a sense of adventure and excitement. Players crawl through the bridge, enjoying a feeling of wonder and thrill as they enter from one side and emerge from the other. Playing on the bridge encourages movement, exploration, and a sense of achievement.



Play Panel

The play panel provides a variety of interactive play options that develop players' motor and cognitive skills. Each panel offers a unique activity that stimulates thinking and encourages players to learn and discover more.



Rope Ladder

The rope ladder provides vertical access to the play structure and encourages players to develop physical skills such as strength, coordination, and balance. Climbing the rope ladder strengthens hand and leg muscles and develops a sense of balance. The ladder encourages players to face challenges and develop flexibility and agility.



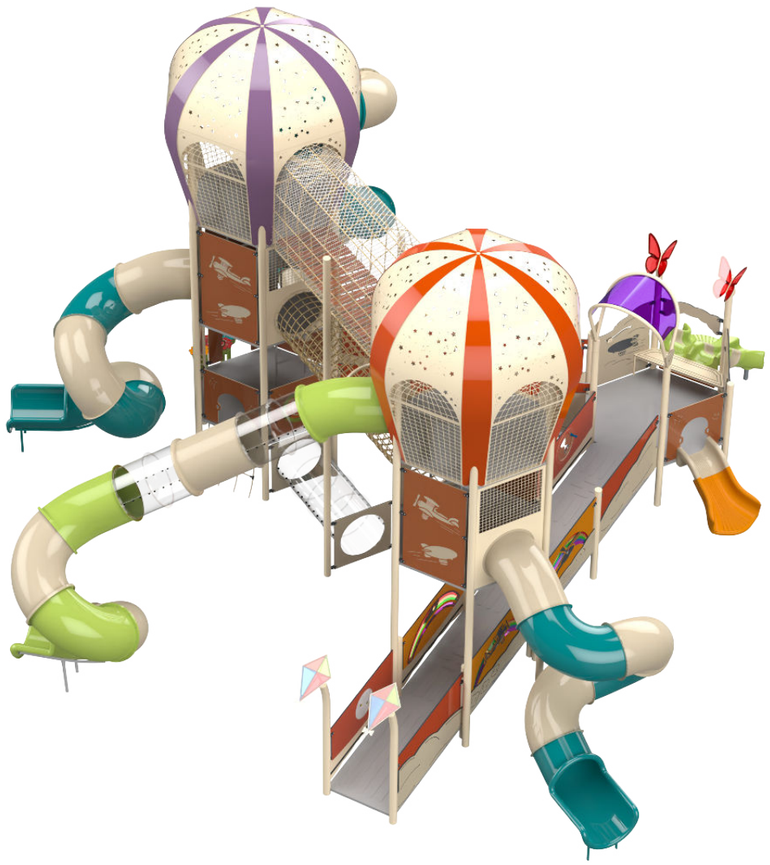

Sensory Development

Vision development- Rich visual experiences through vibrant colors and shapes.

Cognitive Development

Concentration- Developing the ability to focus and maintain attention in equipment requiring concentration. Spatial awareness- Improving the ability to understand and navigate space through mazes and courses. Curiosity - Encouraging exploration and discovery through equipment providing new and unfamiliar experiences. Creativity- Developing creative thinking and imagination in open and interactive play.

Emotional Development

Imagination- Encouraging imagination and creating play worlds. Confidence- Building self-confidence and belief in one's personal abilities. Independence- Developing independence and the ability to make personal decisions. Perseverance- Encouraging perseverance and repeated attempts.

Social Development

Cooperation- Encouraging joint work and reaching shared goals. Communication- Developing effective and clear communication skills with playmates. Leadership- Providing opportunities for leadership development and group leading. Empathy- Developing empathy and the ability to understand and empathize with others' feelings. Respect for boundaries- Learning the importance of respecting personal and social boundaries. Friendship creation- Creating friendships and strengthening social bonds.

Physical Development

Climbing - Strengthening arm and leg muscles, developing fitness and endurance. Crawling - Strengthening abdominal and back muscles, improving coordination and flexibility. Jumping- Improving leg strength and balance. Balancing- Improving balance and posture. Sliding - Strengthening leg and arm muscles and improving coordination.