TSP-10759

4 Balloons

Extreme play system model 4 Balloons

Steel:
Recycled HDPE:
Rope Cables:

Balancing
Rotation
Climbing
Jumping
Swinging
Crawling
Hanging
Sliding

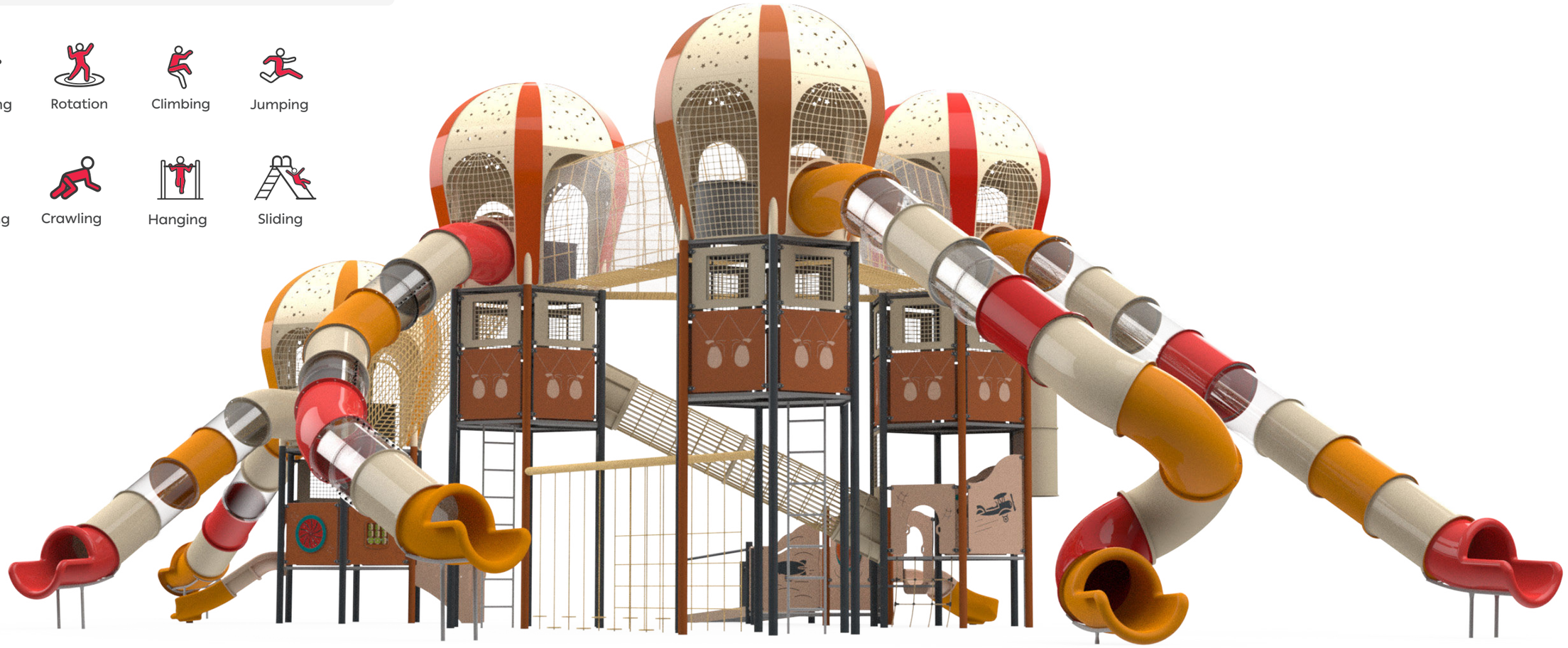

Ages 5-12
Users 166
Dimensions L: 87'-2.8" W: 44'-11.1" H: 25'-11" | L: 2726 W: 1404 H: 810 cm
Safety Zone: 113'-11.7" / 64'-11.3"
Fall Height 9'-6.17" | 290 cm
Accessible

The 4 Balloons is a distinctive, award-winning play structure inspired by the magic of hot air balloons and the thrill of adventure. Honored with the prestigious Good Design Award, this sculptural masterpiece features four vibrant balloon-shaped towers, each offering unique play opportunities.

Connected by suspended bridges, climbing nets, hidden passages, and tunnels, the towers create a dynamic, multi-level play environment. From various elevated platforms, long slides—both straight and spiral—spiral outward, inviting bold descents and joyful motion.



Steel

Steel structure that is strong and durable, oven-painted galvanized and coated with lead-free polyester powder for corrosion and rust resistance. The steel meets strict EN 1176 standards, ensuring high quality and safety. The steel is anti-vandalistic, requires minimal maintenance, and is fully recyclable. The high-quality paint ensures weather resistance and maintains a new appearance over time.



HPL

HPL panels are high-pressure laminate boards produced by saturating multiple layers of kraft paper with phenolic resin. These panels offer high resistance to abrasion, scratches, and chemical impacts, maintaining their quality in both outdoor and indoor conditions. Available in a variety of colors and textures, HPL panels are used for surfaces, walls, and furniture in playground equipment, providing an aesthetic appearance and requiring low maintenance.



Rope Cables

Rope Cables are made of synthetic polypropylene (PP) fibers combined with a galvanized steel core for improved strength and durability. They meet strict standards, such as ASTM A240 and EN 10088, ensuring durability and safety for use in playground equipment. . The cables offer a soft and pleasant touch that does not harm the hands during use and are available in various diameters and colors, allowing for creative and aesthetic design.



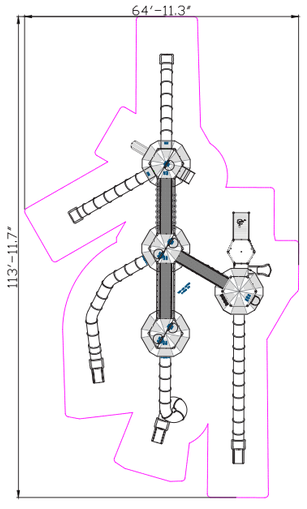

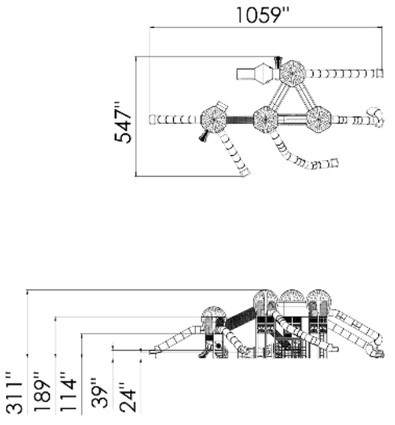



Barrel Slide

The barrel slide provides an exciting and challenging sliding experience, combining movement with a sense of adventure. Sliding in this slide develops players' motor skills and coordination as they move through the tube at varying speeds. The sliding action boosts self-confidence and encourages daring as players face the challenge of fast movement. The slide is a fundamental and important element in any playground and is considered one of the leading and most beloved attractions for players of all ages.



Toddler Slide

The toddler slide provides a safe and enjoyable sliding experience for little ones. It develops coordination, movement, balance, and self-confidence for young players.



Internal Ladder

The internal ladder allows climbing within the structure for moving between different levels and offers a safe and protected play experience. Climbing the internal ladder develops physical skills such as strength, coordination, and balance. The internal ladder encourages players to build self-confidence as they face challenges in a protected environment.



Accessibility Ramp

The accessibility ramp provides easy and safe access for wheelchairs, allowing players with disabilities to move easily and integrate smoothly into the games. Its design ensures stability and security, allowing everyone to enjoy the play experience equally and accessibly.



Hot Air Balloon Roof

This special roof encourages players to dream big and soar high in their imagination, just like a hot air balloon. The hot air balloon inspires and invokes a sense of adventure as players experience the play structure as a magical and fascinating place, enriching their play experience and encouraging them to aim high.



Transition Bridge

The transition bridge provides players with the challenge of crossing safely, while developing balance and coordination skills. The bridge combines height and adventure, encouraging players to maintain stability during the crossing.



Play Panel

The play panel provides a variety of interactive play options that develop players' motor and cognitive skills. Each panel offers a unique activity that stimulates thinking and encourages players to learn and discover more.



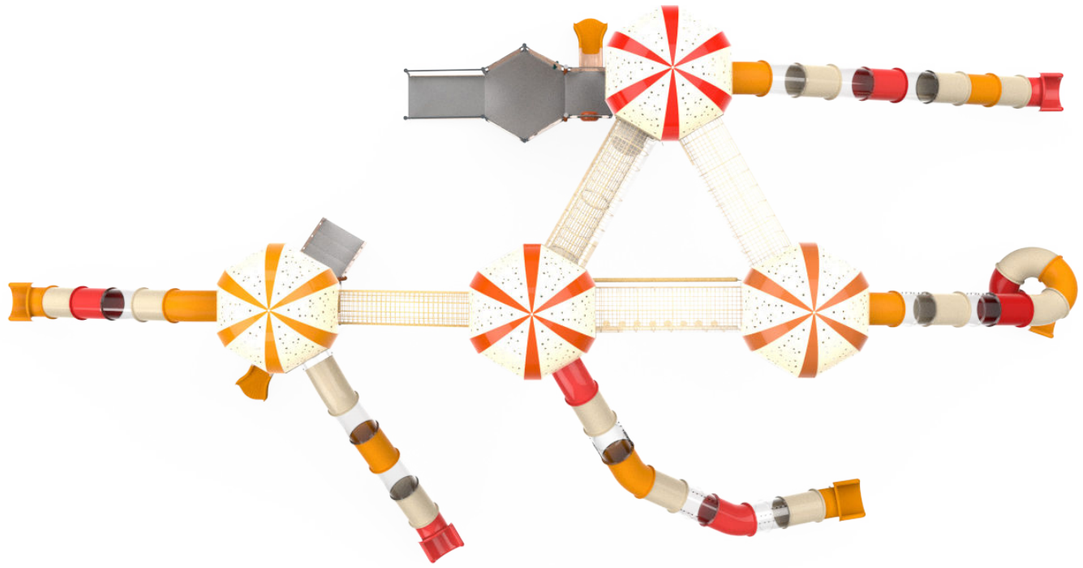

Motor Development

Hand-eye coordination - Developing coordination and precision in activities requiring fine motor skills. Foot-eye coordination - Improving coordination and balance through various equipment. Fine motor skills- Developing precise control in small movements through activities requiring fine manual skills.

Cognitive Development

Spatial awareness- Improving the ability to understand and navigate space through mazes and courses.. Curiosity - Encouraging exploration and discovery through equipment providing new and unfamiliar experiences. Creativity- Developing creative thinking and imagination in open and interactive play.

Emotional Development

Imagination- Encouraging imagination and creating play worlds. Courage- Facing fears and new challenges. Confidence- Building self-confidence and belief in one's personal abilities. Independence- Developing independence and the ability to make personal decisions. Patience- Practicing patience and waiting for one's turn. Initiative- Encouraging initiative and taking an active role in play.

Social Development

Cooperation- Encouraging joint work and reaching shared goals.

Communication- Developing effective and clear communication skills with playmates. Leadership- Providing opportunities for leadership development and group leading. Teamwork- Encouraging teamwork and developing group work skills. Respect for boundaries- Learning the importance of respecting personal and social boundaries. Friendship creation- Creating friendships and strengthening social bonds.

Physical Development

Climbing - Strengthening arm and leg muscles, developing fitness and endurance. Crawling - Strengthening abdominal and back muscles, improving coordination and flexibility. Jumping- Improving leg strength and balance. Hanging - Strengthening arm, back, and shoulder muscles. Balancing- Improving balance and posture.

TSP-5204

Music Panel

Robinia Music Panel

Steel:

Recycled HDPE:

Robinia Wood:



Users 3

Dimensions L: 6’-8.6” W: 1’-3.4” H: 3’-10.1” | L: 210 W: 40 H: 120 cm

Accessible+

The Musical Panel features two engaging musical equipment: a metal xylophone delivering clear, resonant tones, and a colorful drum panel mimicking a basic drum kit with varied, pleasant sounds.

Constructed from durable natural Robinia wood, complemented by high-quality HPL and stainless-steel elements, each panel is thoughtfully designed for accessible use by children and adults alike. The structure inspires spontaneous creativity, rhythm exploration, and musical dialogue. This interactive duet fosters communication, attentive listening, and cooperation, providing a calming yet stimulating multisensory experience. Perfect for seating areas, walking trails, playgrounds, and outdoor learning environments.



Recycled HDPE

HDPE (High-Density Polyethylene) is a recycled material made from high-density polyethylene, produced from recycled materials that allows for further recycling. It excels in resistance to UV rays and wear and tear, making it particularly suitable for use in outdoor playground equipment. Its touch is smooth and pleasant, and its appearance is maintained over time. The advantages include high resistance to harsh weather conditions and environmental preservation. The material is capable of absorbing high energy, which helps prevent fractures.



Polycarbonate

Colored polycarbonate is a durable, lightweight, and transparent thermoplastic polymer that complies with international standards such as EN 71 and ISO 179. It has a smooth touch, a glossy appearance, and is available in a variety of colors and transparencies. The material is used to create decorative elements in playground equipment, offering high impact resistance, UV protection, and great design flexibility

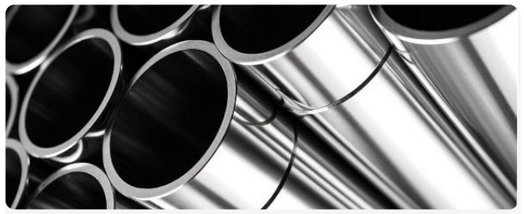

Stainless Steel 316

Stainless Steel 316 is an alloy of iron, chromium, nickel, and molybdenum, providing exceptional resistance to corrosion, rust, and stains. It meets strict playground equipment standards such as ASTM A240 and EN 10088, offering a smooth touch and shiny appearance. Particularly suitable for use in coastal and humid areas, and industrial and urban environments. Even in these challenging areas, Stainless Steel 316 maintains a clean and shiny appearance over time.Steel 316 maintains a clean and shiny appearance over time.



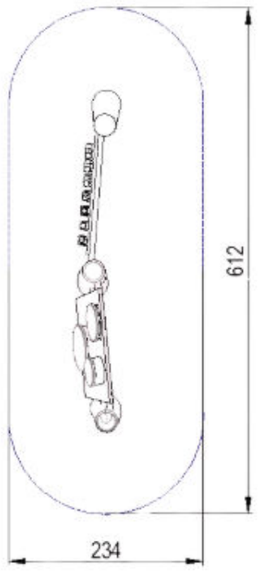

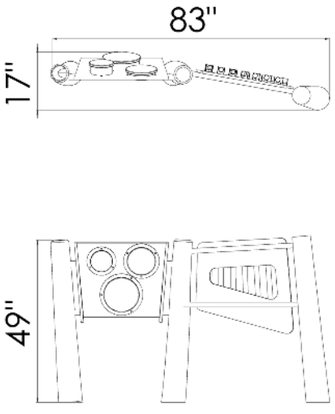





Motor Development

Hand-eye coordination - Developing coordination and precision in activities requiring fine motor skills.

Cognitive Development

Concentration- Developing the ability to focus and maintain attention in equipment requiring concentration. Curiosity - Encouraging exploration and discovery through equipment providing new and unfamiliar experiences. Creativity- Developing creative thinking and imagination in open and interactive play.

Emotional Development

Confidence- Building self-confidence and belief in one's personal abilities. Independence- Developing independence and the ability to make personal decisions. Initiative- Encouraging initiative and taking an active role in play.

Social Development

Cooperation- Encouraging joint work and reaching shared goals. Communication- Developing effective and clear communication skills with playmates. Teamwork- Encouraging teamwork and developing group work skills. Respect for boundaries- Learning the importance of respecting personal and social boundaries. Friendship creation- Creating friendships and strengthening social bonds.

Sensory Development

Hearing development- Stimulating the sense of hearing through the integration of sounds and music.