TMU-US-P9614

Music Wall

Musica Wall

Recycled HDPE:

Steel:



Ages 2-12 | Users 2 | Dimensions L: 114" W: 40" H:3'-2.8" | cm L: 2892 W: 1012 H: 101 | Safety Zone 13'-2.7"/1'-11.4" | cm 401 / 58 | Accessible +

From the music notebook straight to the yard. This instrument features colorful chimes arranged according to their position in the musical scale. The note's name and pitch are determined by its position on the staff lines. Continuous tapping from left to right reveals a familiar song. It is designed to be installed on a wall.



Recycled HDPE

HDPE (High-Density Polyethylene) is a recycled material made from high-density polyethylene, produced from recycled materials that allows for further recycling. It excels in resistance to UV rays and wear and tear, making it particularly suitable for use in outdoor playground equipment. Its touch is smooth and pleasant, and its appearance is maintained over time. The advantages include high resistance to harsh weather conditions and environmental preservation. The material is capable of absorbing high energy, which helps prevent fractures.



Steel

Steel structure that is strong and durable, oven-painted galvanized and coated with lead-free polyester powder for corrosion and rust resistance. The steel meets strict EN 1176 standards, ensuring high quality and safety. The steel is anti-vandalistic, requires minimal maintenance, and is fully recyclable. The high-quality paint ensures weather resistance and maintains a new appearance over time.

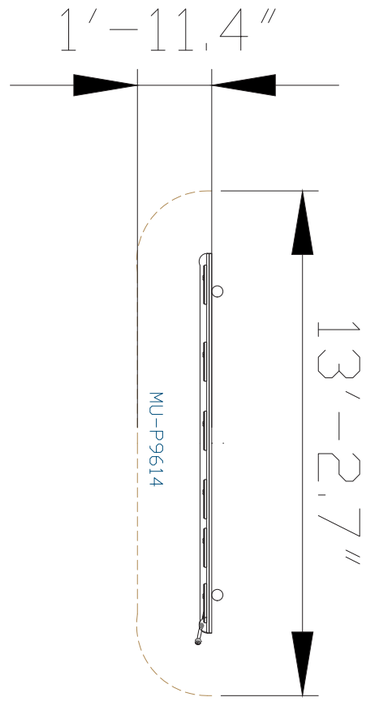



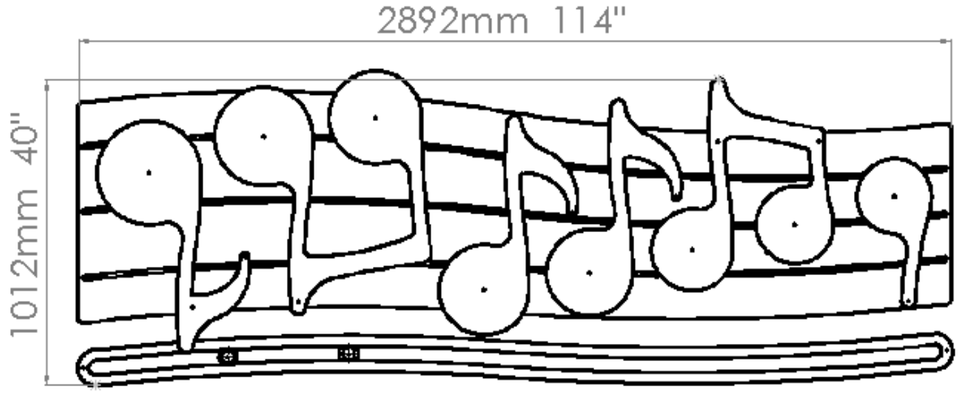



Motor Development

Hand-eye coordination - Developing coordination and precision in activities requiring fine motor skills.

Cognitive Development

Concentration- Developing the ability to focus and maintain attention in equipment requiring concentration. Curiosity - Encouraging exploration and discovery through equipment providing new and unfamiliar experiences. Creativity- Developing creative thinking and imagination in open and interactive play.

Emotional Development

Imagination- Encouraging imagination and creating play worlds. Independence- Developing independence and the ability to make personal decisions. Initiative- Encouraging initiative and taking an active role in play. Perseverance- Encouraging perseverance and repeated attempts.

Sensory Development

Touch development- Diverse sensory experiences through different materials and textures. Hearing development- Stimulating the sense of hearing through the integration of sounds and music.