Psagot Playgrounds

TMP-US-10621-2C

Chicago C

Multi-Play Unit Model Chicago C

:Recycled HDPE

:Steel

Climbing

Jumping

Sliding



Ages 2-12

Users 68

Dimensions L: 26'-2.7" W: 22'-6.7" H: 18'-1.4" | L: 801 W: 691 H: 553 cm

Safety Zone: 73'-0.2" / 56'-6.1" | 2226 / 1722 cm

Fall Height 9'-5.1" | 290 cm

Accessible

This play structure features a nature-inspired design with tree-like roofs that give the installation a distinctive appearance and create the feeling of playing within a green, adventurous environment.

Between the different sections, the structure integrates connecting bridges and crawl tunnels that allow smooth movement and a continuous sense of exploration throughout the play space.

The structure includes a variety of slides-both enclosed and open-offering a diverse and exciting sliding experience. The combination of elements encourages climbing, free movement, and imaginative play, allowing children to enjoy an active and adventure-filled play environment



Recycled HDPE

HDPE (High-Density Polyethylene) is a recycled material made from high-density polyethylene, produced from recycled materials that allows for further recycling. It excels in resistance to UV rays and wear and tear, making it particularly suitable for use in outdoor playground equipment. Its touch is smooth and pleasant, and its appearance is maintained over time. The advantages include high resistance to harsh weather conditions and environmental preservation. The material is capable of absorbing high energy, which helps prevent fractures.



Steel

Steel structure that is strong and durable, oven-painted galvanized and coated with lead-free polyester powder for corrosion and rust resistance. It meets strict playground equipment standards such as ASTM A240 and EN 10088, ensuring high quality and safety. The steel is anti-vandalistic, requires minimal maintenance, and is fully recyclable. The high-quality paint ensures weather resistance and maintains a new appearance over time.

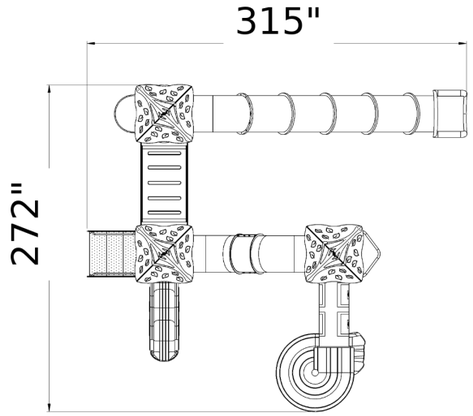



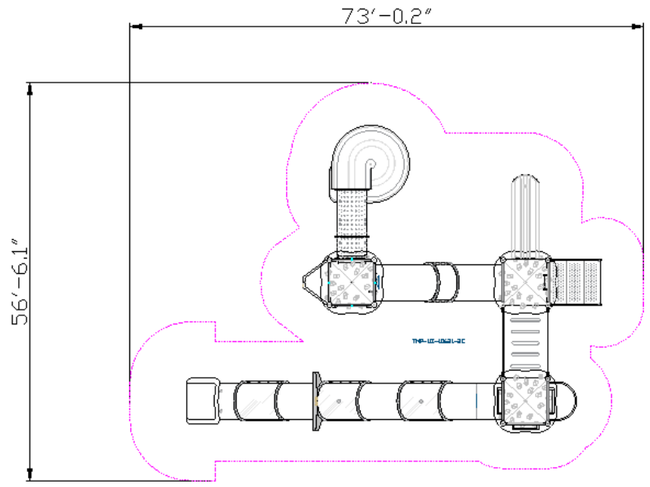

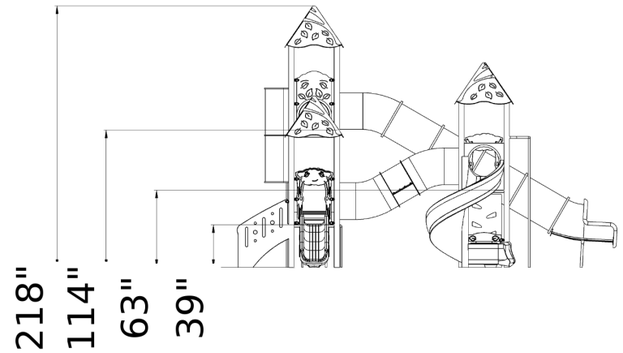

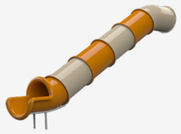

Barrel Slide

The barrel slide provides an exciting and challenging sliding experience, combining movement with a sense of adventure. Sliding in this slide develops players' motor skills and coordination as they move through the tube at varying speeds. The sliding action boosts self-confidence and encourages daring as players face the challenge of fast movement. The slide is a fundamental and important element in any playground and is considered one of the leading and most beloved attractions for players of all ages.



Slide

A slide is a fundamental and important element in any playground, considered one of the leading and most beloved attractions for players of all ages. The slide provides an enjoyable and exciting sliding experience that develops players' motor skills and coordination. Playing on the slide encourages movement, daring, and self-confidence.



Fall Guard

The fall guard provides additional protection in areas where there is a risk of climbing and falling.



Sliding Pole

The sliding pole allows for a quick and safe descent from the play structure, providing a fun and thrilling play experience. Young players can feel like firefighters in action. Using the pole strengthens hand and upper body muscles. Players learn to control the speed and direction of their descent, contributing to the development of control skills and self-confidence.

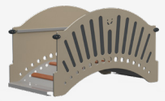

Open Bridge

The open bridge allows safe and convenient passage between parts of the structure, developing players' motor skills and balance. The height dimension from the ground adds a sense of excitement and adventure as players practice maintaining stability and confidence while crossing the bridge. Playing on the bridge encourages movement and self-confidence.



Climbing Wall

The climbing wall offers a physical challenge that develops the muscle strength, coordination and weight of the players. Climbing the wall improves their problem solving. This is a place where players overcome fears and develop courage and self-confidence.



Accessible Stairs

The high-durability stairs provide easy and safe access to the play structure, with a non-slip surface to prevent falls. Climbing and descending the stairs help players develop physical skills such as strength, coordination, and balance. The stairs also encourage independence and self-confidence as players learn to navigate heights and new tasks. Suitable for transfer accessibility to ensure convenient and safe access for players with disabilities, including smooth transitions from a wheelchair to the play structure and back.

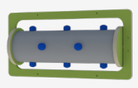

Play Panel

The play panel provides a variety of interactive play options that develop players' motor and cognitive skills. Each panel offers a unique activity that stimulates thinking and encourages players to learn and discover more.



Play Panel

The play panel provides a variety of interactive play options that develop players' motor and cognitive skills. Each panel offers a unique activity that stimulates thinking and encourages players to learn and discover more.

Psagot Playgrounds



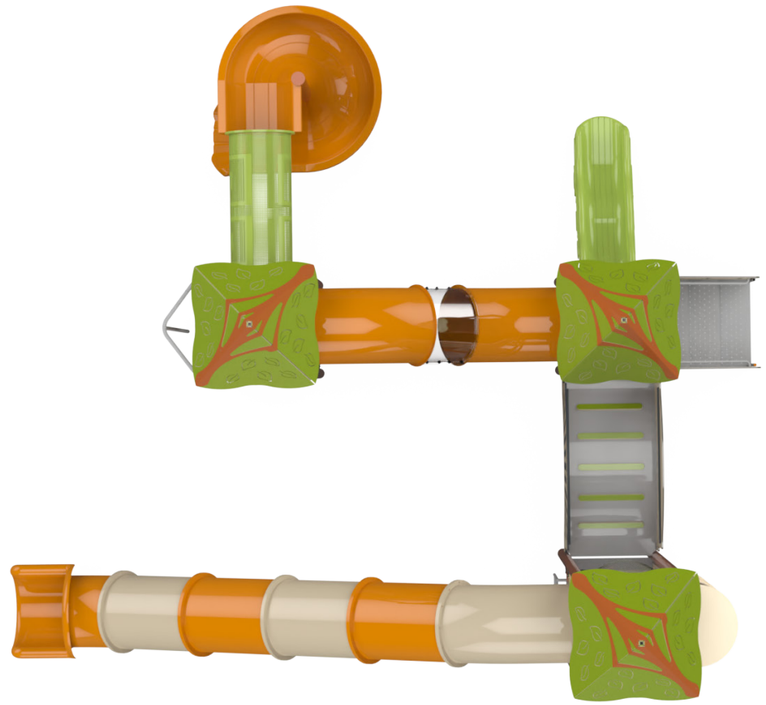

Motor Development

Hand-eye coordination - Developing coordination and precision in activities requiring fine motor skills. Foot-eye coordination - Improving coordination and balance through various equipment.

Sensory Development

Touch development - Diverse sensory experiences through different materials and textures. Vision development - Rich visual experiences through vibrant colors and shapes.

Cognitive Development

Concentration - Developing the ability to focus and maintain attention in equipment requiring concentration. Spatial awareness - Improving the ability to understand and navigate space through mazes and courses. Regulation of force - Developing the ability to apply the right amount of force according to the activity. Curiosity - Encouraging exploration and discovery through equipment providing new and unfamiliar experiences. Creativity - Developing creative thinking and imagination in open and interactive play.

Emotional Development

Imagination - Encouraging imagination and creating play worlds. Courage - Facing fears and new challenges. Confidence - Building self-confidence and belief in one's personal abilities. Independence - Developing independence and the ability to make personal decisions. Resilience - Coping with failure and trying again. Achievement - Developing a sense of accomplishment and satisfaction from success in challenging equipment.

Social Development

Cooperation - Encouraging joint work and reaching shared goals. Communication - Developing effective and clear communication skills with playmates. Leadership - Providing opportunities for leadership development and group leading. Teamwork - Encouraging teamwork and developing group work skills. Respect for boundaries - Learning the importance of respecting personal and social boundaries. Friendship creation - Creating friendships and strengthening social bonds.

Physical Development

Climbing - Strengthening arm and leg muscles, developing fitness and endurance. Jumping - Improving leg strength and balance. Sliding - Strengthening leg and arm muscles and improving coordination.