TSP-5228

Robinia Hexagons

Hexagons - Robinia Wood

Robinia Wood:

Balancing

Climbing

Jumping



Ages 2-12

Users 5

Dimensions L: 6'' W: 5'-2.1'' H: 1'-4.4'' | L:447 W: 285 H: 44 cm

Safety Zone: 30'-2.1'' / 27'-8.9''| 909 / 800 cm

Fall Height 1'-4.7'' | 45 cm

Accessible

The hexagonal steps transform the ground into a colorful and inviting pathway that. Each hexagon stands on a natural robinia wood post with a slightly rough, wild texture, and the top panels are decorated with vibrant colored stripes that blend harmoniously, giving the structure a cheerful and playful appearance. Together, they create a dynamic sequence of small height differences that encourage movement, curiosity, and adventure, evoking the feeling of stepping on magical stones suspended above the ground. The sturdy robinia structure provides confidence with every step, and the hexagons are arranged closely in a natural flow, forming a small, imaginative adventure trail.



Robinia Wood

European Robinia wood is natural, robust, and durable, particularly suitable for use in outdoor playground equipment. It complies with stringent standards such as FSC, has a smooth and pleasant touch, a natural and authentic appearance, and integrates well with natural surroundings. Its high durability, long lifespan, and being a natural and safe material make it a popular choice for use in playground equipment.



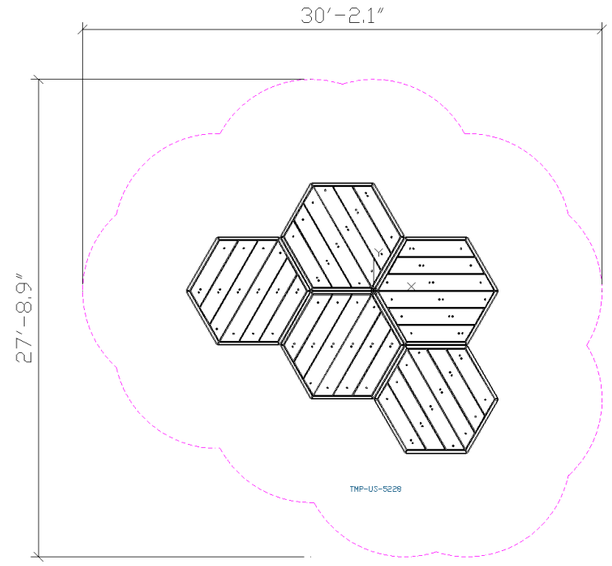

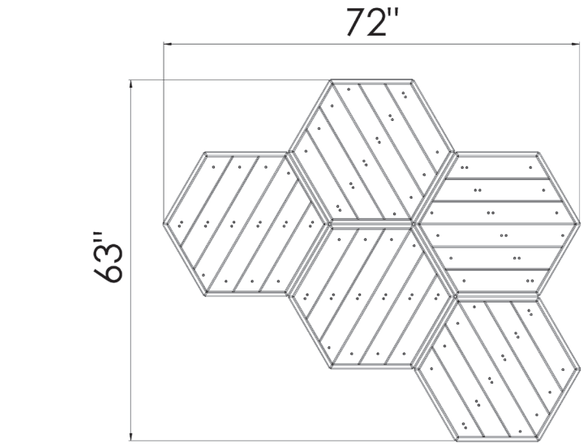

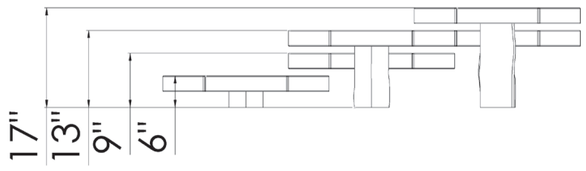

Physical Development

Climbing - Strengthening arm and leg muscles, developing fitness and endurance. Jumping- Improving leg strength and balance. Balancing- Improving balance and posture.

Cognitive Development

Concentration- Developing the ability to focus and maintain attention in equipment requiring concentration. Spatial awareness- Improving the ability to understand and navigate space through mazes and courses. Regulation of force- Developing the ability to apply the right amount of force according to the activity.Curiosity - Encouraging exploration and discovery through equipment providing new and unfamiliar experiences.



Social Development

Cooperation- Encouraging joint work and reaching shared goals. Communication- Developing effective and clear communication skills with playmates. Respect for boundaries- Learning the importance of respecting personal and social boundaries. Friendship creation- Creating friendships and strengthening social bonds.

Emotional Development

Courage- Facing fears and new challenges. Confidence- Building self-confidence and belief in one's personal abilities. Achievement- Developing a sense of accomplishment and satisfaction from success in challenging equipment. Independence- Developing independence and the ability to make personal decisions.

Motor Development

Foot-eye coordination - Improving coordination and balance through various equipment.

Sensory Development

Touch development- Diverse sensory experiences through different materials and textures. Vision development- Rich visual experiences through vibrant colors and shapes.