TSP-5249

Robina Climbing Roofs

Climbing & Play Roofs - Robinia

Robinia Wood:

Steel:

Balancing

Climbing



Ages 5-12

Users 21

Dimensions L: 161'-4" W: 64'-7.3" H: 63'-6" | L: 491 W: 197 H: 193 cm

Safety Zone: 28'-2" | 858 cm

Fall Height 6'-3" | 192 cm

Accessible

The hexagonal steps transform the ground into a colorful and inviting pathway that. Each hexagon stands on a natural robinia wood post with a slightly rough, wild texture, and the top panels are decorated with vibrant colored stripes that blend harmoniously, giving the structure a cheerful and playful appearance. Together, they create a dynamic sequence of small height differences that encourage movement, curiosity, and adventure, evoking the feeling of stepping on magical stones suspended above the ground. The sturdy robinia structure provides confidence with every step, and the hexagons are arranged closely in a natural flow, forming a small, imaginative adventure trail.



Robinia Wood

European Robinia wood is natural, robust, and durable, particularly suitable for use in outdoor playground equipment. It complies with stringent standards such as FSC, has a smooth and pleasant touch, a natural and authentic appearance, and integrates well with natural surroundings. Its high durability, long lifespan, and being a natural and safe material make it a popular choice for use in playground equipment.



Steel

Steel structure that is strong and durable, oven-painted galvanized and coated with lead-free polyester powder for corrosion and rust resistance. The steel meets strict EN 1176 standards, ensuring high quality and safety. The steel is anti-vandalistic, requires minimal maintenance, and is fully recyclable. The high-quality paint ensures weather resistance and maintains a new appearance over time.

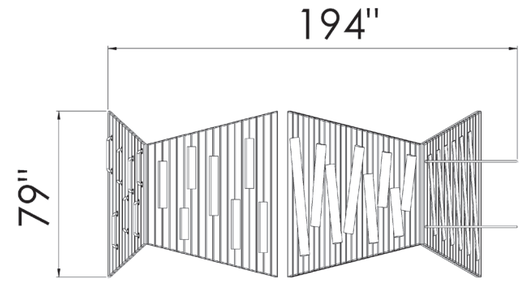

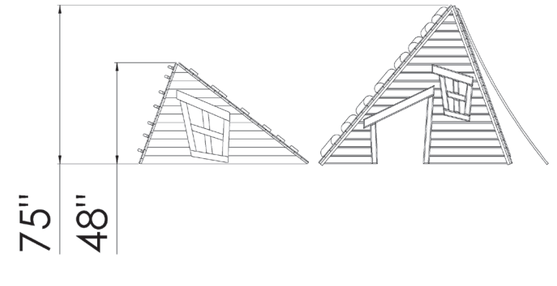



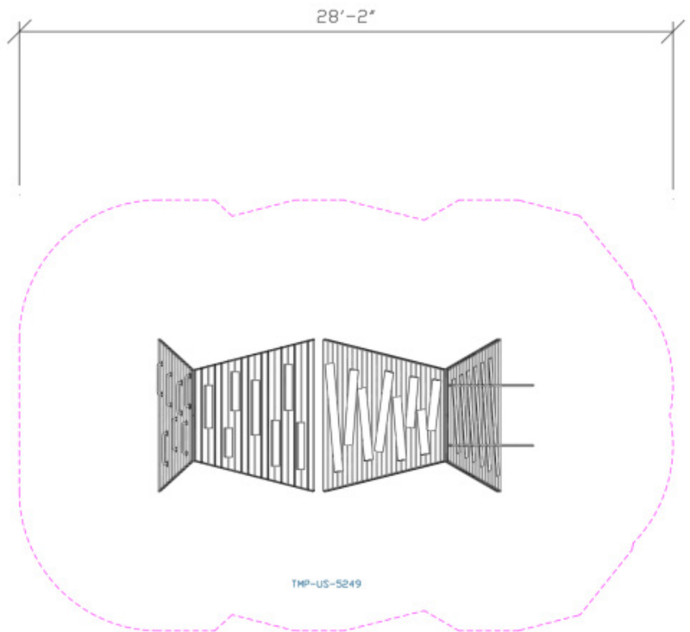



Motor Development

Hand-eye coordination - Developing coordination and precision in activities requiring fine motor skills. Foot-eye coordination - Improving coordination and balance through various equipment.

Cognitive Development

Concentration- Developing the ability to focus and maintain attention in equipment requiring concentration. Regulation of force- Developing the ability to apply the right amount of force according to the activity. Curiosity - Encouraging exploration and discovery through equipment providing new and unfamiliar experiences.

Emotional Development

Courage- Facing fears and new challenges. Confidence- Building self-confidence and belief in one's personal abilities. Independence- Developing independence and the ability to make personal decisions. Initiative- Encouraging initiative and taking an active role in play. Resilience- Coping with failure and trying again. Perseverance- Encouraging perseverance and repeated attempts. Achievement- Developing a sense of accomplishment and satisfaction from success in challenging equipment.

Social Development

Cooperation- Encouraging joint work and reaching shared goals. Communication- Developing effective and clear communication skills with playmates.

Physical Development

Climbing - Strengthening arm and leg muscles, developing fitness and endurance. Balancing- Improving balance and posture.

Sensory Development

Touch development- Diverse sensory experiences through different materials and textures.