TSP-3926

Marco

Fitness Equipment - Pisa Series, Model Marco

Steel:

Balancing Hanging Climbing Jumping



Ages 5-12 | Users 4 | Dimensions L: 74" W: 67" H: 94" | L: 187 W: 169 H: 238 cm | Safety Zone: 18'-9" | 571 cm | Fall Height 7'-2.1" | 220 cm

"The Marco fitness structure from the Pisa series is a compact and dynamic training unit designed especially for parkour and free movement training. Its open structure creates an inviting training framework that allows for natural transitions between elements and a continuous flow of movement and practice.



Steel

Steel structure that is strong and durable, oven-painted galvanized and coated with lead-free polyester powder for corrosion and rust resistance. The steel meets strict EN 1176 standards, ensuring high quality and safety. The steel is anti-vandalistic, requires minimal maintenance, and is fully recyclable. The high-quality paint ensures weather resistance and maintains a new appearance over time.

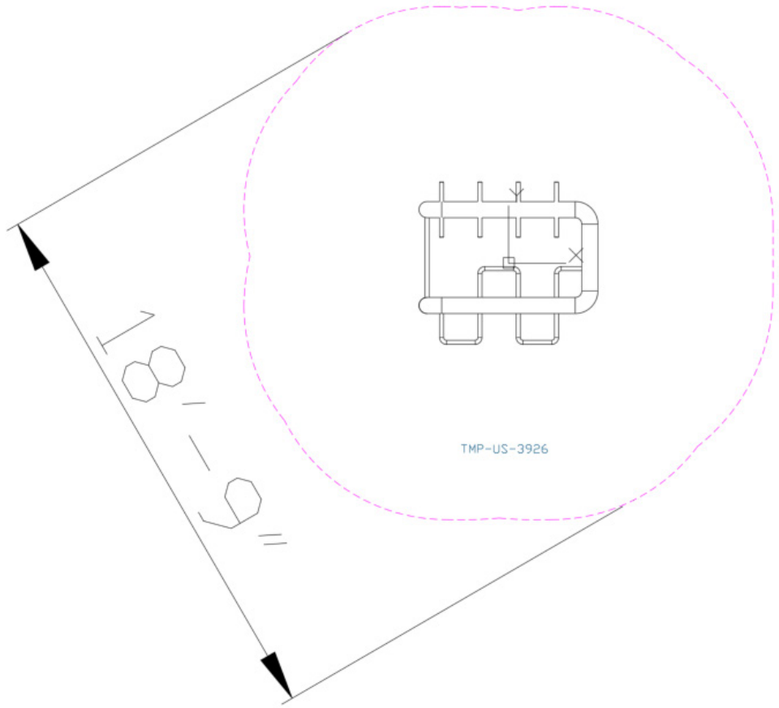



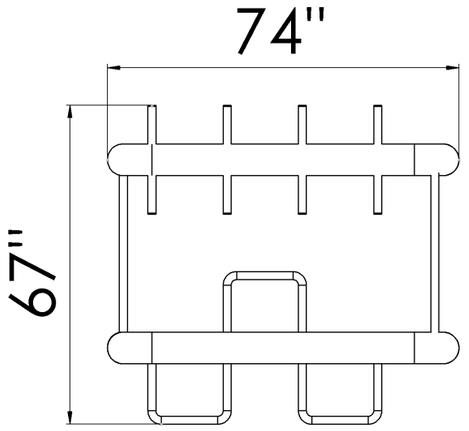

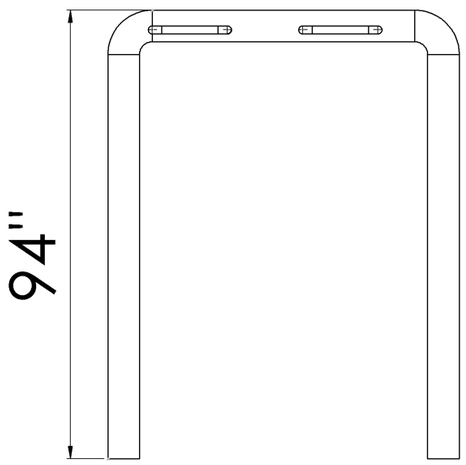

Physical Development

Climbing - Strengthening arm and leg muscles, developing fitness and endurance. Jumping- Improving leg strength and balance. Balancing- Improving balance and posture. Hanging - Strengthening arm, back, and shoulder muscles.

Cognitive Development

Concentration- Developing the ability to focus and maintain attention in equipment requiring concentration. Regulation of force- Developing the ability to apply the right amount of force according to the activity. Curiosity - Encouraging exploration and discovery through equipment providing new and unfamiliar experiences. Creativity- Developing creative thinking and imagination in open and interactive play.

Social Development

Cooperation- Encouraging joint work and reaching shared goals. Respect for boundaries- Learning the importance of respecting personal and social boundaries. Friendship creation- Creating friendships and strengthening social bonds.

Emotional Development

Courage- Facing fears and new challenges. Confidence- Building self-confidence and belief in one's personal abilities. Independence- Developing independence and the ability to make personal decisions. Patience- Practicing patience and waiting for one's turn. Initiative- Encouraging initiative and taking an active role in play. Perseverance- Encouraging perseverance and repeated attempts. Achievement- Developing a sense of accomplishment and satisfaction from success in challenging equipment.

Motor Development

Hand-eye coordination - Developing coordination and precision in activities requiring fine motor skills.
Core muscle strengthening- Strengthening abdominal and back muscles through challenging equipment.

Sensory Development

Touch development- Diverse sensory experiences through different materials and textures.



For illustration purposes only