TSP-3929

Frederick

Fitness Equipment - Pisa Series, Model Frederick

:Steel

Balancing

Climbing

Jumping

Hanging



Ages 5-12

Users 4

Dimensions L: 91" W: 30" H: 94" | L: 231 W: 77 H: 238 cm

Safety Zone: 19'-6.7" / 14'-6.3" | 596 / 443 cm

Fall Height 7'-2.1" | 220 cm

The Frederick fitness structure from the Pisa series is a dynamic training unit designed especially for parkour and free movement. The structure creates a compact training station that allows for natural flow between climbing, transitions, and hanging, inviting users to move freely and creatively.

It combines a vertical climbing ladder, an upper frame for hand walking, and a side element for parallel bar exercises and body control. This combination enables a wide range of exercises such as climbing, transitions between bars, explosive strength training, pull-ups, and hanging movements, forming a short and intense movement course.

The strong and clean design integrates naturally into parkour courses and urban fitness areas, providing users with a challenging space to develop strength, coordination, and movement control.



Steel

Steel structure that is strong and durable, oven-painted galvanized and coated with lead-free polyester powder for corrosion and rust resistance. It meets strict playground equipment standards such as ASTM A240 and EN 10088, ensuring high quality and safety. The steel is anti-vandalistic, requires minimal maintenance, and is fully recyclable. The high-quality paint ensures weather resistance and maintains a new appearance over time.

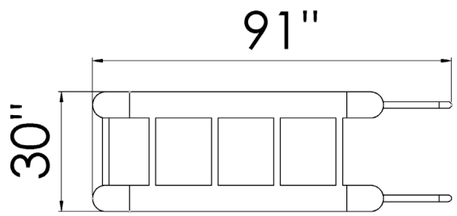

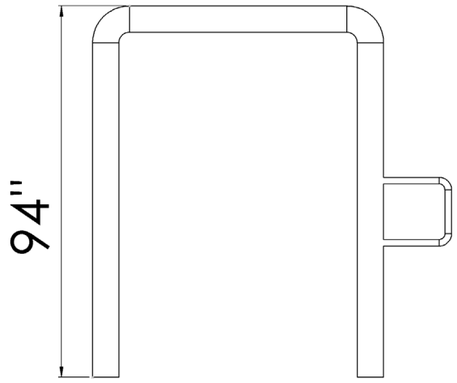



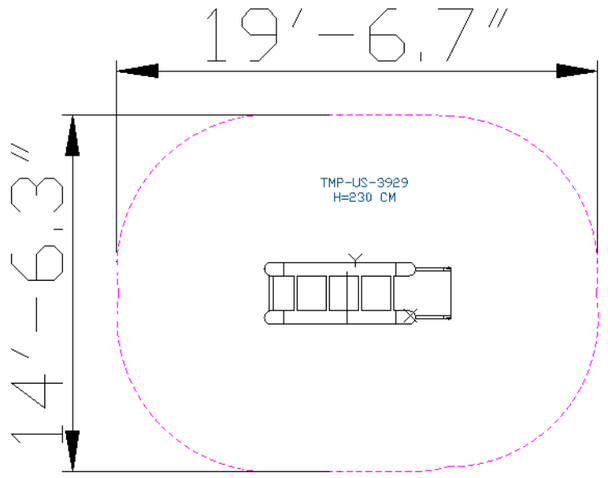



Motor Development

Hand-eye coordination - Developing coordination and precision in activities requiring fine motor skills. Core muscle strengthening - Strengthening abdominal and back muscles through challenging equipment.

Sensory Development

Touch development - Diverse sensory experiences through different materials and textures.

Cognitive Development

Concentration - Developing the ability to focus and maintain attention in equipment requiring concentration. Regulation of force - Developing the ability to apply the right amount of force according to the activity. Curiosity - Encouraging exploration and discovery through equipment providing new and unfamiliar experiences. Creativity - Developing creative thinking and imagination in open and interactive play.

Emotional Development

Courage - Facing fears and new challenges. Confidence - Building self-confidence and belief in one's personal abilities. Independence - Developing independence and the ability to make personal decisions. Patience - Practicing patience and waiting for one's turn. Initiative - Encouraging initiative and taking an active role in play. Resilience - Coping with failure and trying again. Perseverance - Encouraging perseverance and repeated attempts. Achievement - Developing a sense of accomplishment and satisfaction from success in challenging equipment.

Social Development

Cooperation - Encouraging joint work and reaching shared goals. Respect for boundaries - Learning the importance of respecting personal and social boundaries. Friendship creation - Creating friendships and strengthening social bonds.

Physical Development

Climbing - Strengthening arm and leg muscles, developing fitness and endurance. Jumping - Improving leg strength and balance. Hanging - Strengthening arm, back, and shoulder muscles. Balancing - Improving balance and posture.