TSP-3930

Kiara

Fitness Equipment - Pisa Series, Model Kiara

:Steel

Balancing Climbing Jumping Hanging

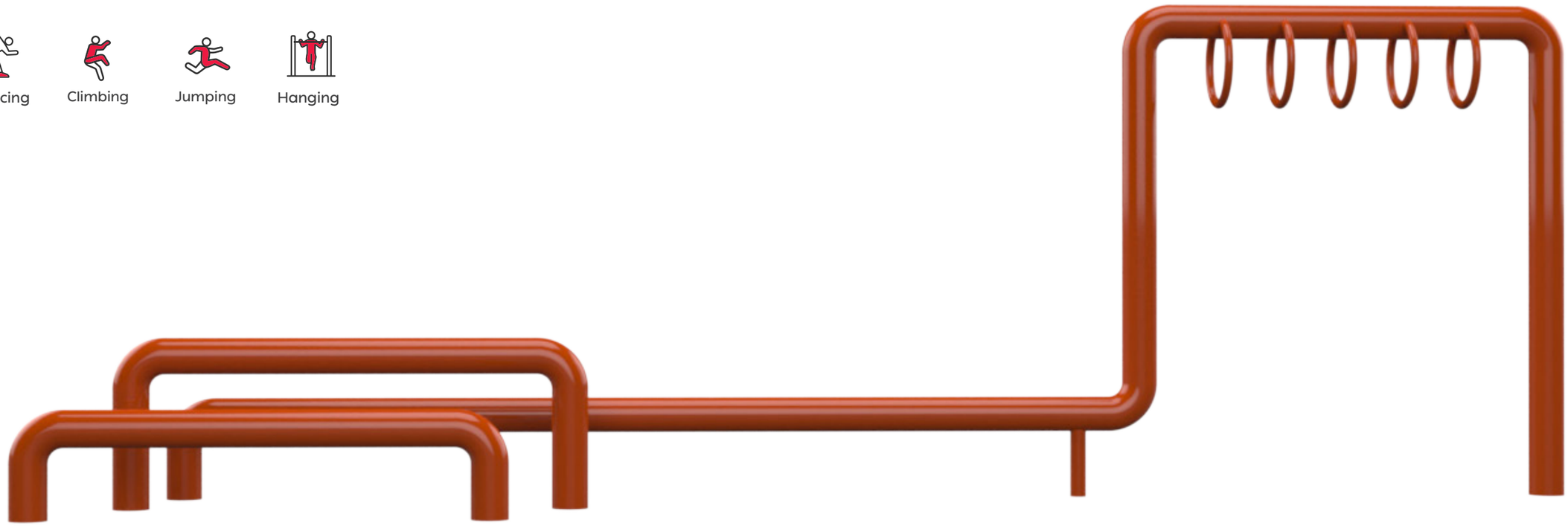

Ages 2-12 | Users 17 | Dimensions L: 286" W: 57" H: 94" | L: 726 W: 145 H: 238 cm | Safety Zone: 35'-9.7" / 16'-8.8" | 1091 / 510 cm | Fall Height 7'-2.1" | 220 cm

The Kiara fitness structure from the Pisa series is a dynamic training unit designed especially for parkour and free movement. Its elongated structure creates a natural and continuous movement path, allowing smooth transitions between elements and inviting users to move, jump, and explore a variety of exercises along the structure.

The structure combines hand rings for traversing, a long transition element, and a pair of parallel bars at different heights for strength and body control exercises. This combination enables hanging exercises, transitions between rings, precise jumps, and explosive strength training, creating a challenging and dynamic workout experience.

The clean and durable design integrates naturally into parkour courses and urban fitness areas, allowing users to build a flowing sequence of movement that combines strength, coordination, and full control of motion.



Steel

Steel structure that is strong and durable, oven-painted galvanized and coated with lead-free polyester powder for corrosion and rust resistance. It meets strict playground equipment standards such as ASTM A240 and EN 10088, ensuring high quality and safety. The steel is anti-vandalistic, requires minimal maintenance, and is fully recyclable. The high-quality paint ensures weather resistance and maintains a new appearance over time.

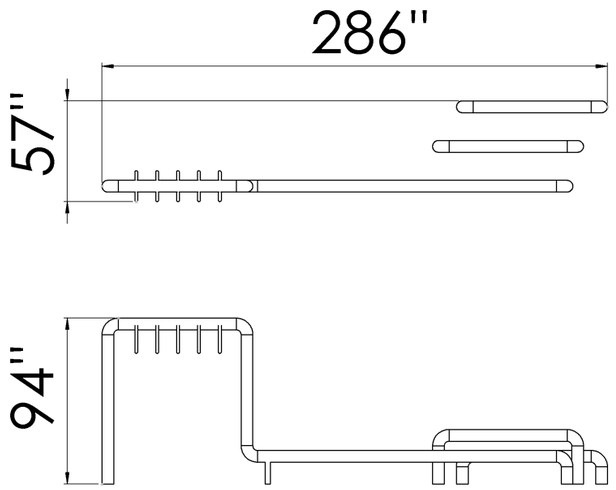



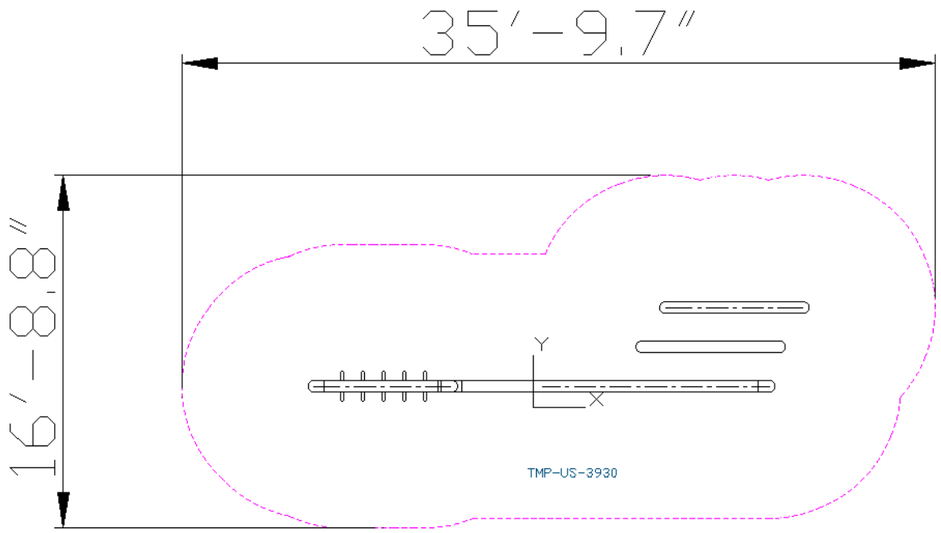

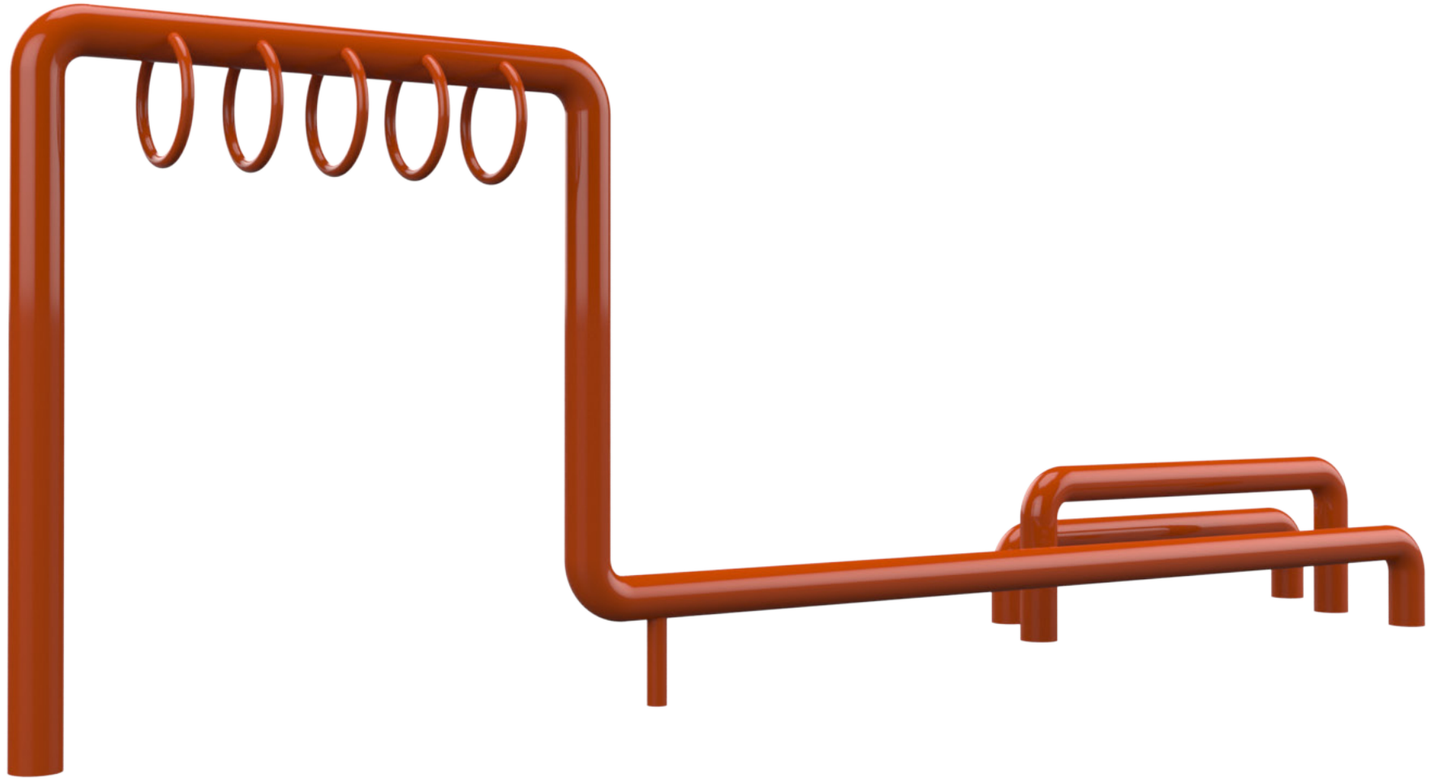

Motor Development

Hand-eye coordination - Developing coordination and precision in activities requiring fine motor skills. Core muscle strengthening - Strengthening abdominal and back muscles through challenging equipment.

Sensory Development

Touch development - Diverse sensory experiences through different materials and textures.

Cognitive Development

Concentration - Developing the ability to focus and maintain attention in equipment requiring concentration. Regulation of force - Developing the ability to apply the right amount of force according to the activity. Curiosity - Encouraging exploration and discovery through equipment providing new and unfamiliar experiences. Creativity - Developing creative thinking and imagination in open and interactive play.

Emotional Development

Courage - Facing fears and new challenges. Confidence - Building self-confidence and belief in one's personal abilities. Independence - Developing independence and the ability to make personal decisions. Patience - Practicing patience and waiting for one's turn. Initiative - Encouraging initiative and taking an active role in play. Resilience - Coping with failure and trying again. Perseverance - Encouraging perseverance and repeated attempts. Achievement - Developing a sense of accomplishment and satisfaction from success in challenging equipment.

Social Development

Cooperation - Encouraging joint work and reaching shared goals. Respect for boundaries - Learning the importance of respecting personal and social boundaries. Friendship creation - Creating friendships and strengthening social bonds.

Physical Development

Climbing - Strengthening arm and leg muscles, developing fitness and endurance. Jumping - Improving leg strength and balance. Hanging - Strengthening arm, back, and shoulder muscles. Balancing - Improving balance and posture.