TSP-3933

Ricardo

Fitness Equipment - Pisa Series, Model Ricardo

:Steel

Balancing

Climbing

Jumping

Hanging

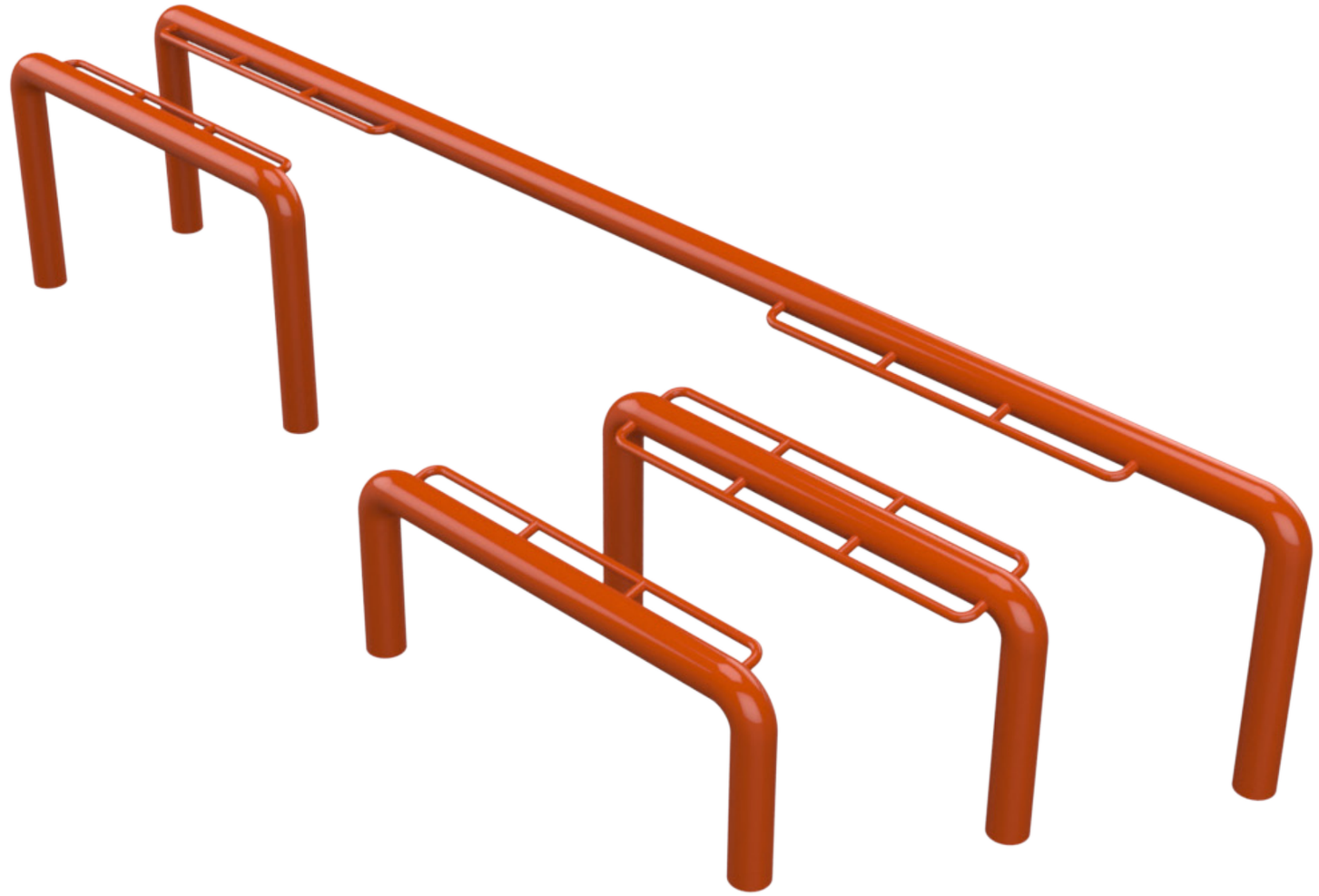

Ages 5-12

Users 12

Dimensions L: 266" W: 74" H: 51" | L: 677 W: 187 H: 128 cm

Safety Zone: 34'-2.2" / 18'-2.3" | 1042 / 554 cm

Fall Height 4'-2.6" | 130 cm

The Ricardo fitness structure from the Pisa series is a dynamic training unit designed for parkour and free movement. The structure creates a flowing training path that allows natural transitions between elements and encourages continuous movement of jumping, transitioning, and balancing along the course.

It combines a long transition element with several parallel bars at different heights, enabling strength, control, and precision exercises. This setup allows for jumps between surfaces, handwork, parallel bar exercises, and a variety of parkour movements, creating a challenging and dynamic training sequence.

The clean and durable design integrates naturally into parkour courses and urban fitness areas, allowing users to develop strength, coordination, and full control of movement while enjoying a smooth and engaging workout experience.



Steel

Steel structure that is strong and durable, oven-painted galvanized and coated with lead-free polyester powder for corrosion and rust resistance. It meets strict playground equipment standards such as ASTM A240 and EN 10088, ensuring high quality and safety. The steel is anti-vandalistic, requires minimal maintenance, and is fully recyclable. The high-quality paint ensures weather resistance and maintains a new appearance over time.

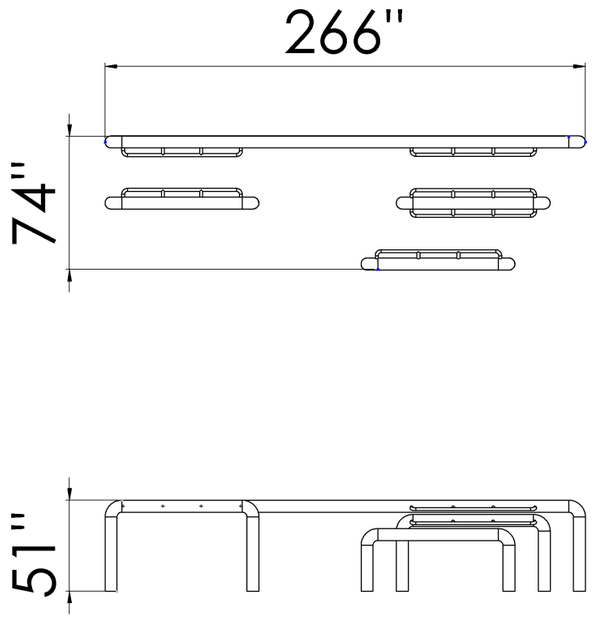



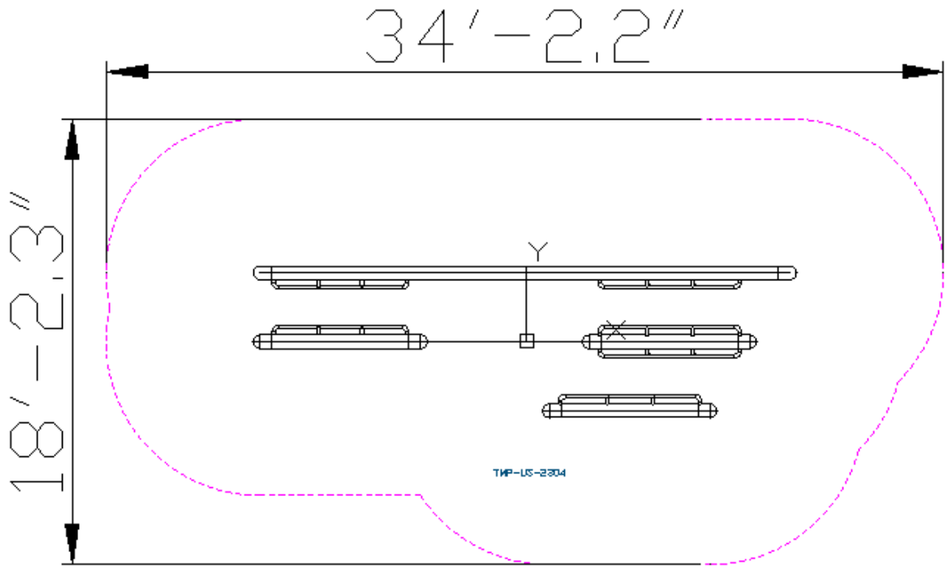



Motor Development

Hand-eye coordination - Developing coordination and precision in activities requiring fine motor skills. Core muscle strengthening - Strengthening abdominal and back muscles through challenging equipment.

Sensory Development

Touch development - Diverse sensory experiences through different materials and textures.

Cognitive Development

Concentration - Developing the ability to focus and maintain attention in equipment requiring concentration. Regulation of force - Developing the ability to apply the right amount of force according to the activity. Curiosity - Encouraging exploration and discovery through equipment providing new and unfamiliar experiences. Creativity - Developing creative thinking and imagination in open and interactive play.

Emotional Development

Courage - Facing fears and new challenges. Confidence - Building self-confidence and belief in one's personal abilities. Independence - Developing independence and the ability to make personal decisions. Patience - Practicing patience and waiting for one's turn. Initiative - Encouraging initiative and taking an active role in play. Resilience - Coping with failure and trying again. Perseverance - Encouraging perseverance and repeated attempts. Achievement - Developing a sense of accomplishment and satisfaction from success in challenging equipment.

Social Development

Cooperation - Encouraging joint work and reaching shared goals. Respect for boundaries - Learning the importance of respecting personal and social boundaries. Friendship creation - Creating friendships and strengthening social bonds.

Physical Development

Climbing - Strengthening arm and leg muscles, developing fitness and endurance. Jumping - Improving leg strength and balance. Hanging - Strengthening arm, back, and shoulder muscles. Balancing - Improving balance and posture.